BTX SMART MONITOR MANUAL

THIS MANUAL CONTAINS:

BTX HARDWARE INSTALLATION MANUAL
BTX OPERATOR'S MANUAL

SPECIAL NOTE

READ THIS ENTIRE BOOKLET BEFORE PROCEEDING WITH THE INSTALLATION

BOONE CABLE WORKS & ELECTRONICS, INC.
1773-219TH LANE - P.O. BOX 369
BOONE, IOWA 50036 USA
PHONE (515) 432-2010 FAX (515) 432-5262
TOLL FREE (800)-265-2010

BTX HARDWARE INSTALLATION MANUAL

TABLE OF CONTENTS

1. INTRODUCTION

This document describes how to correctly install the *Bearing Temperature Smart Monitoring System (BTX)* in grain elevators and processing facilities. Conveying equipment has motors, bearings or alignment rubs are points of friction, which can ignite dust, resulting in fire or explosion. Though it was designed for agricultural applications, the BTX is useful anywhere material handling equipment is used and failure of motor, bearing or belt misalignment would cause a problem. The BTX is a tool for preventive maintenance as well as for safety.

PURPOSE OF THE BTX SYSTEM

The BTX Smart Monitor system is used to continually monitor points of friction by means of thermocouple sensors. By adding the Motion Module to the Main Instrument, rotational speed sensors can also be monitored for slowdowns. The BTX Is used to control alarm relays that will signal when temperatures or speeds move outside limits which are programmed by the operator. The resulting alarm will alert the equipment operator of any potentially dangerous conditions.

It can operate as a “Stand-Alone” system with an HMI, or connect to an existing Process Control PLC and send out data and alarm/warning notifications.

GOOD INSTALLATION PRACTICES

Keep signal and DC wires and cables in separate conduit from conduit carrying AC Line Voltage.
Use Shielded Cable for Thermocouple and Motion signals. Ground the MS-200 Drain wire at the Instrument end only. Any exposed Drain Wire must not contact the enclosure, conduit or any part of the raceway. Shorten or insulate with electric tape or spaghetti tube.

2. SYSTEM OVERVIEW

The entire System may consist of the BTX Monitor (which may include an HMI and a PLC with Power Supply and Ethernet Switching). a wired or wireless Gateway and one or more BTX/Motion modules. When using a wireless Gateway, the BTX modules are connected to a BRX module to communicate the information wirelessly. All these assemblies work together to form the BTX system. Also, the Gateway and the BTX modules can be operated as a separate system, connected to a computer. In this section we will describe their basic functions and relationships. The BTX module(s) poll the thermocouples in a daisy-chain manner through the use of a wired/wireless Gateway. Each Gateway connects to a number of BTX modules or BTX/BRX combo, which can read up to 8 thermocouples. A Gateway can connect, one at a time, to as many as 10 to 16 separate BTX modules, depending on the distance between each module. The Gateway then sends back the information to either the BTX Monitor or directly to a computer.

2.1. POSSIBLE CONFIGURATIONS

Most systems will monitor both motion and temperature. Figure 1 describes a simplified view of a complete system. It is possible to install and operate a BTX system that monitors only temperature or only motion. For one or the other, remove all thermocouple sensors, or delete the *Motion Module (Speed Sensor)* and all that is connected to it. See following sections on Temperature Systems and Motion Systems.

2.1.1. Where to install the BTX Smart Monitor; This is required to be in an ordinary location only (Non-classified). Mount on the wall of an Office, Motor Control Center Room or other Control Room preferably at eye-level. It can be separated where the PLC is mounted closer to the equipment and the Monitor in a more hazard-free location.

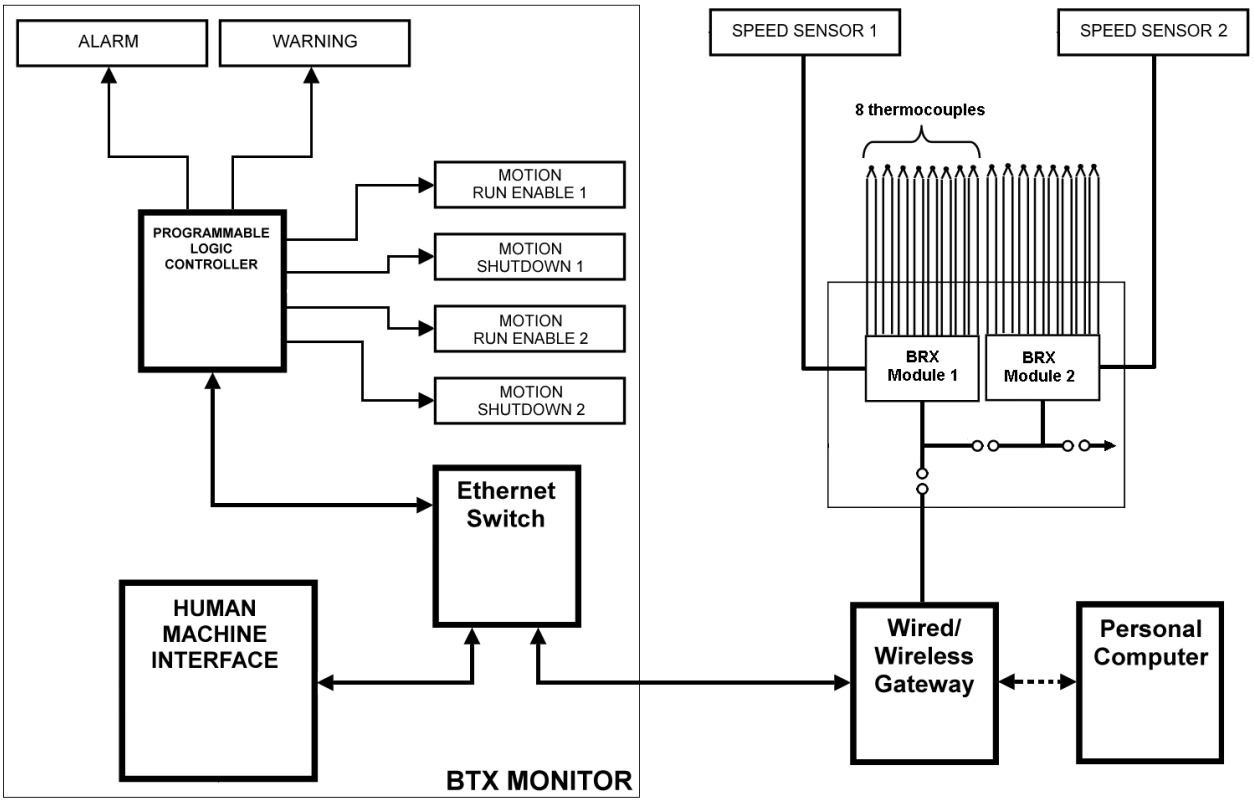

Figure1. Temperature & Motion System

3. BTX SMART MONITOR

The BTX Smart Monitor is an embedded system, based on a Human Machine Interface (HMI) Screen, with a Programmable Logic Controller (PLC), Ethernet switching, and Relay Contacts. It has sophisticated features to watch conveying equipment (belts, legs, drags, augers) in grain elevators and mills. All these components are mounted in an Enclosure. (See figures 2 & 3).

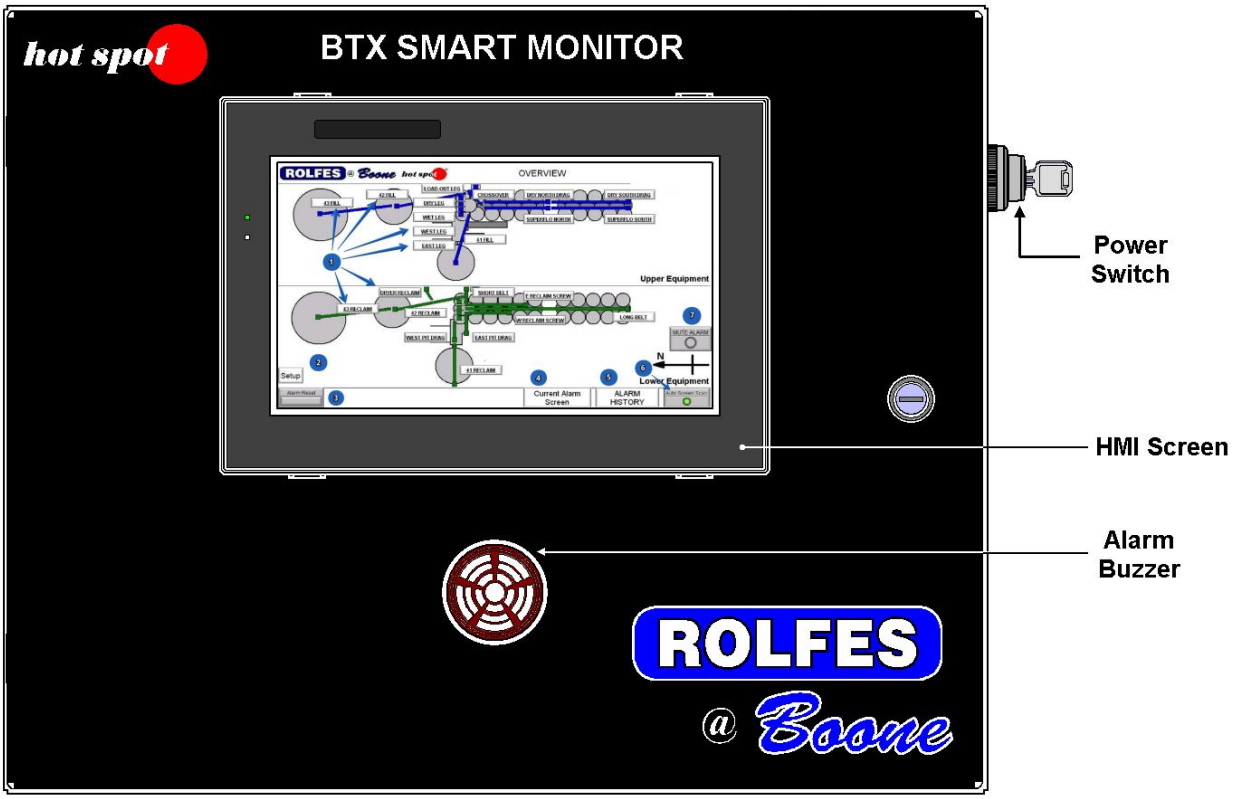

Figure 2. BTX Smart Monitor

3.1. EXTERNAL COMPONENTS

3.1.1 Human Interface Machine (HMI) Screen; Its main features:
Displays the main screen with the facility overhead and the location of the equipment being monitored. The main screen also features the different buttons to step through the different equipment screens and functions to change settings for the main screen. The equipment screens display the location for the Bearing and Rub sensors and the Motion sensors. It also has buttons to change settings for each screen (see the Operators Manual how to use the Monitor).

3.1.2 Power switch; The BTX Smart Monitor is powered on and off by a key operated switch.

3.1.3 Alarm Buzzer; External alarm buzzer to audibly indicate alarm & warning status. Inside the Monitor are terminals to hook up an custom audible device.

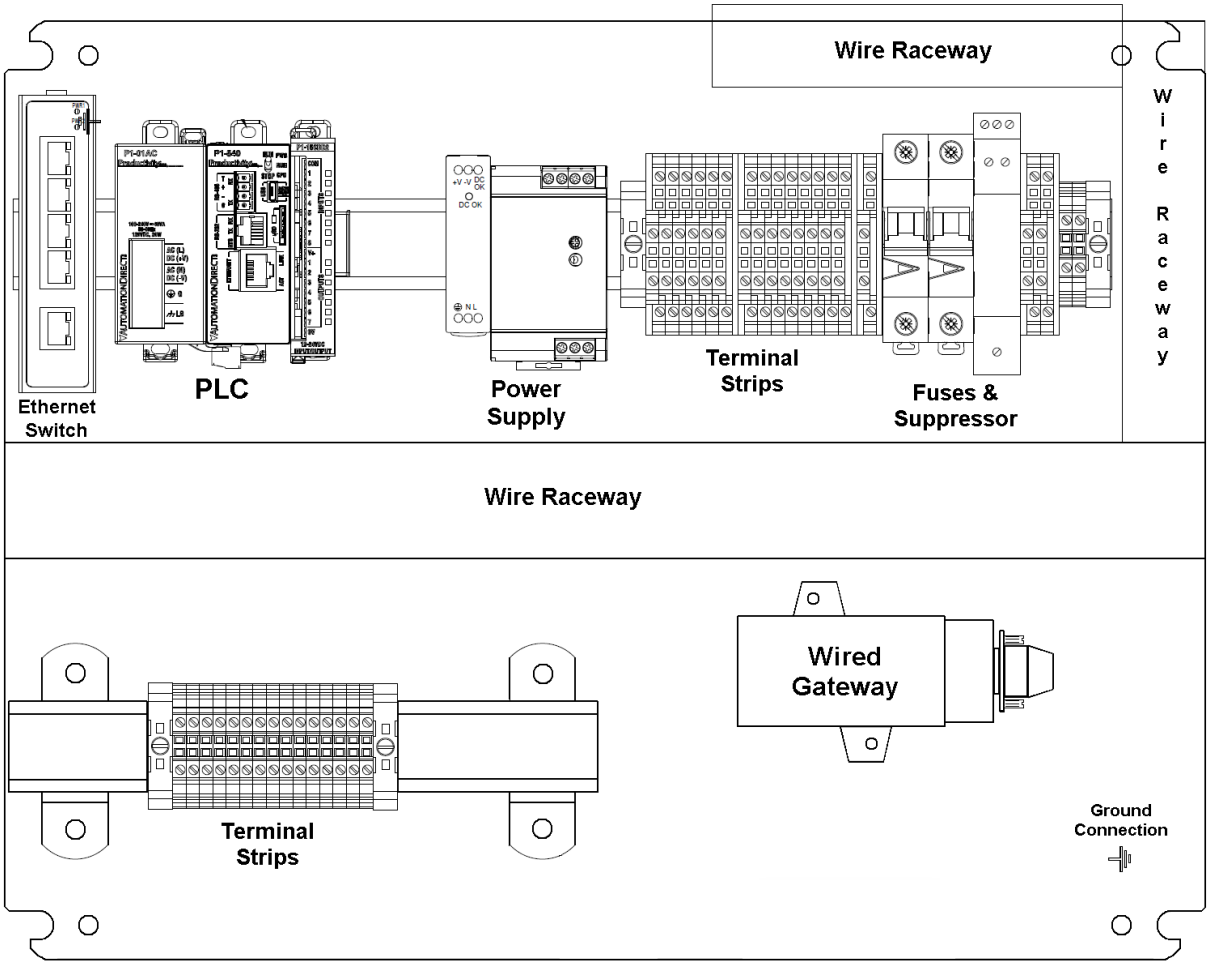

Figure 3. BTX Smart Monitor (internal components)

3.2. INTERNAL COMPONENTS

3.2.1 Programmable Logic Controller (PLC); Features: Processor & Communication Module, Power Supply Module, and Input/Output Modules.

3.2.2 Power Supply (120V/240V AC); To power the equipment inside the BTX Smart Monitor, such as the HMI, PLC, and ethernet switch.

3.2.3 Ethernet Switch; To communicate using TCP/IP, the ethernet switch connects the HMI, the PLC, and the Gateway to a network or stand-alone computer.

3.2.4 Fuses & Suppressor; To protect the internal components from power surges.

3.2.5 Terminal strips; To connect the internal components to the customers alarm and warning devices, and other external devices.

3.2.6 Wired Gateway; Connects to the BTX Modules out in the field.

3.3. CONNECTIONS

The majority of the connections should have been made at the factory to the Terminal Block Assembly mounted on the DIN rail.

3.3.1. Line power; AC line voltage (120/240 VAC, 60 Hz) is provided to the *Power Supply(s)* (AS#) in the enclosure. Internal fuses are provided for better safety. Leave connections to a qualified electrician.

3.3.2. Grounding; All the components inside the enclosure that require voltage and the main AC line voltage coming in, has an Earth Ground wire hooked up to the ground terminal strip.

3.3.3. Surge Suppression; Protection from poor (dirty) power quality coming in on the line is provided with an industrial grade suppressor.

3.3.4. Ports; The BTX can communicate with a personal computer or another PLC using one of two Recommended Standards of communications protocol.

3.3.4.1. TCP/IP; This feature streams up-to-date sensor information through an ethernet cable from the HMI to a PC/Monitor or with a PLC to a PC. An internal ethernet switch is provided to connect all the components to the outside ethernet port.

3.3.4.2. MODBUS; Enables communication among many devices connected to the same network.

4. TEMPERATURE SYSTEMS

The following components and connections are what you will need to know to make the temperature part of the system run. (See figure 1).

4.1. BTX MODULE

These are used to minimize the amount of wire and cable necessary by eliminating redundant runs. A full temperature system can keep track of #? separate thermocouple sensors. Only one Group (or section) of eight is connected to the module at any one time. The module is an enclosure that holds one or more of the BTX Boards or a BTX board with a KTX board to connect the information from the BTX back to a wireless Gateway. (See figure 4)

4.1.1. Where to install; These boxes are mounted in a remote location in close proximity to the grouping of sensors that they read. It may be advantageous to mount more than one of the BTX modules in the same enclosure. These may be installed near the sensor or near the wired Gateway.

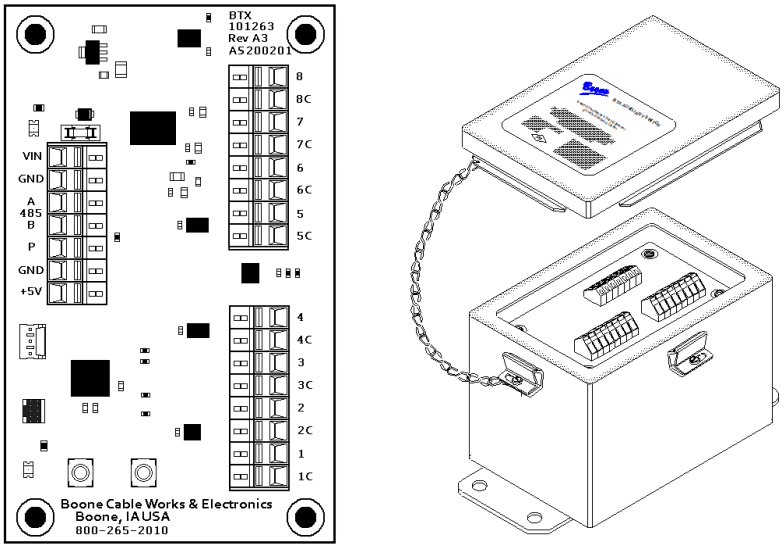

Figure 4. BTX Module board with BTX Module in enclosure

4.1.2. BTX module Board; This board (Figure 4.) has on one side, a power input (12V DC and common), a 485 output (A & B), a Motion sensor output (P(ulse), GND, +5V), and on the other side, 8 thermocouple inputs (2 blocks of 4).
Each thermocouple input has its own constantan connection (white terminal) and a colored terminal for the individual coppers. We dedicate two 4-TC Shielded Leadwire Cables for each terminal block.
The 8 sensors are read with this board and the information is send back to a wired Gateway using the 485-communication line.

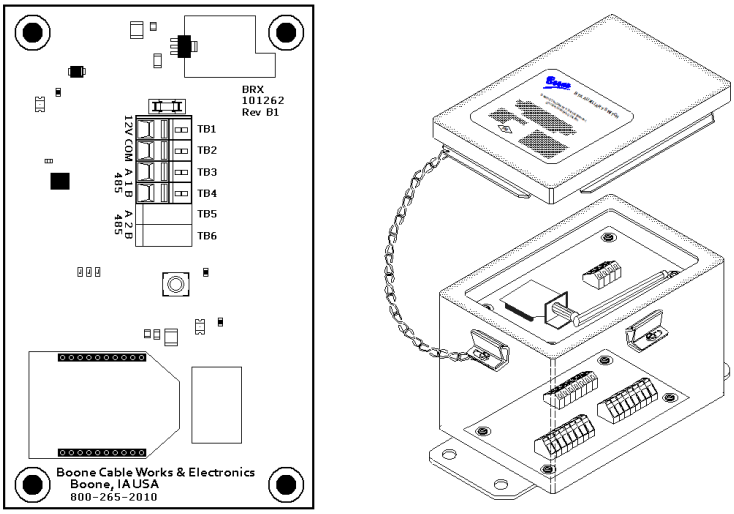

Figure 5. BRX Module board with BTX & BRX Module in enclosure

4.1.3. BRX module Board; This board is used for connecting the BTX module to a wireless Gateway. (See figure 5). There is a 4 terminal block which consists of a power input (12V DC and common) and a 485 output (A & B).
The BRX module is mounted on top of the BTX module with 4 standoffs. Connect the 485 connection from the BTX module to the 485 connection of the BRX module. The sensor input information is “transported” to a wireless Gateway with 2.1 GHz.

4.2. CONNECTING BTX MODULES TO A WIRED GATEWAY

Control Wire runs from the Gateway to the first BTX module boxes and daisy-chain between each subsequent Remote BTX Module. (See figure 6).

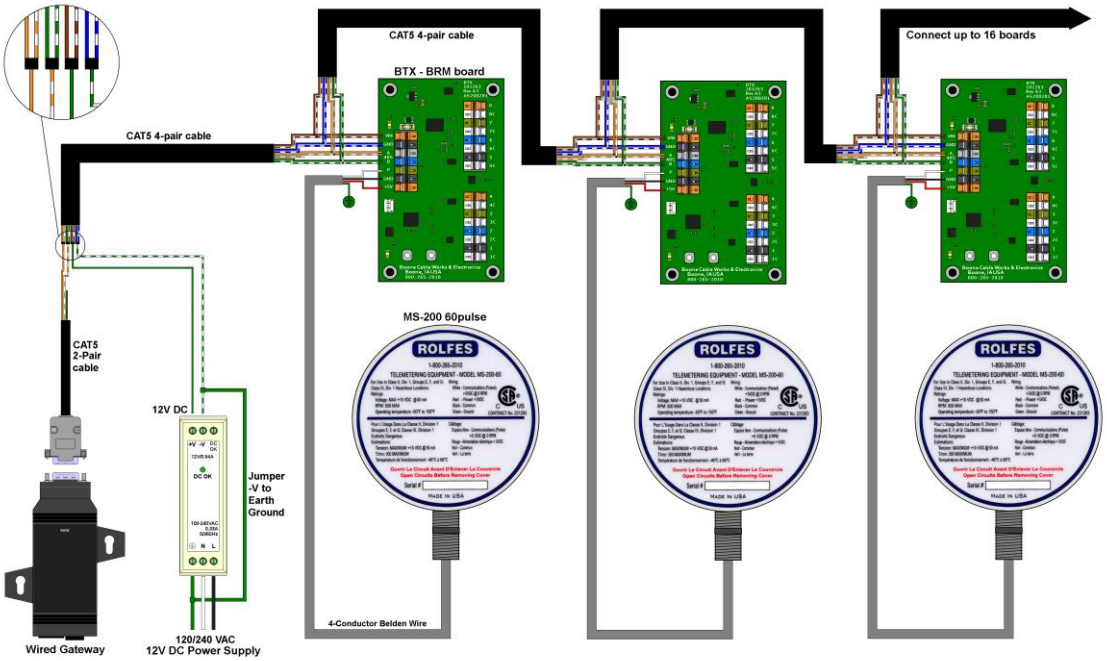

Figure 6. BTX & Motion Modules connected to a Wired Gateway

4.2.1. CAT5 4-pair Cable; A cable made up of 4 pairs of 24 AWG copper wires and used for *communication & power*. This cable is unshielded and carries +12VDC and the RS485 communication signal. Its purpose is to connect the *Gateway (wired)* to all *Remote BTX Boards* through the method of daisy-chain between each individual BTX board. Use one pair for +12V, one pair for GND, one pair for the RS485 communication lines A, and one pair for B. Connect up to 16 BTX boards to one Gateway. If more BTX boards are needed, use a second Gateway.

4.2.2. CAT5 2-pair Cable; A cable made up of 2 pairs of copper, 24 AWG wires for *communication* between the Gateway (wired) and the BTX boards. This cable is unshielded and carries the RS485 communication signal. It is connected to a female 9-pin plug.

4.2.3. 4-Conductor Belden Wire; (), A cable made up of 4 stranded coppers (black, white, red, and green), 18 AWG with TTFN insulation. Serves as a *signal* and *voltage (5V DC)* carrier between the *BTX board* and the *MS-200 60 pulse Motion Sensor*. Use the white wire for P(ulse), the black wire for GND, and the red wire for +5V. The green wire hooks up to Earth ground.

4.3. CONNECTING BTX MODULES TO A WIRELESS GATEWAY

Control Wire runs from the BTX module to the BRX module. Each BTX module will have its own BRX module and the information gets send to a wireless Gateway. (See figure 7).

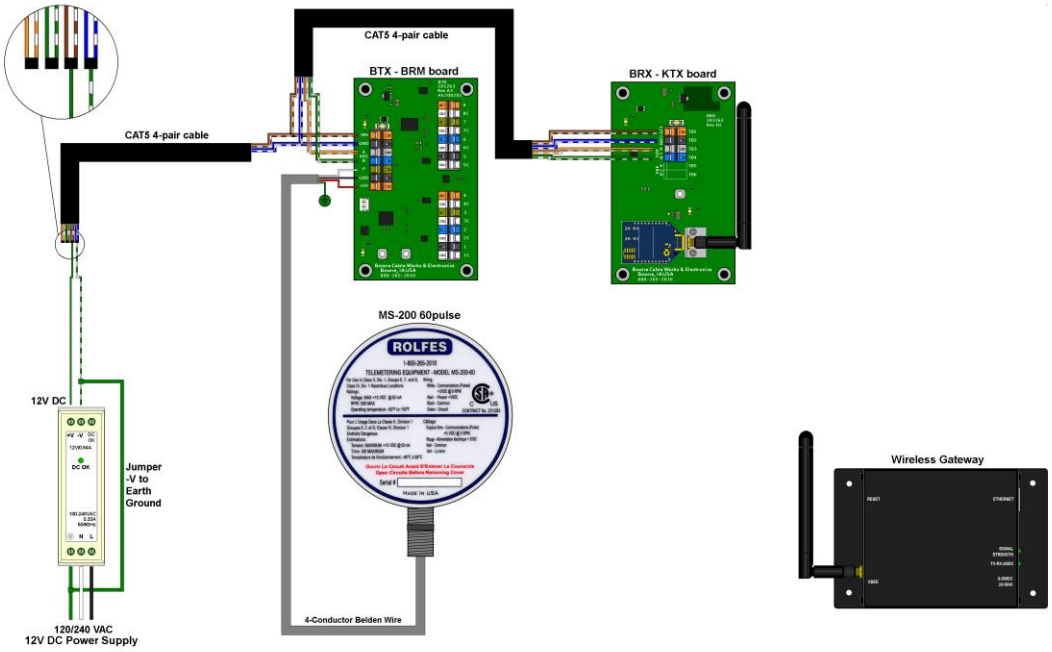

Figure 7. BTX, BRX & Motion Modules connected to a Wireless Gateway

4.3.1. CAT5 4-pair Cable; A cable made up of 4 pairs of 24 AWG copper wires and used for *communication & power*. This cable is unshielded and carries +12VDC and the RS485 communication signal. Its purpose is to connect the *Remote BTX Boards* to the *BRX Boards*. The BRX boards communicate back and forth to a *Wireless Gateway*. Use one pair for +12V, one pair for GND, one pair for the RS485 communication lines A, and one pair for B. Connect up to 16 BTX – BRX combinations to one Wireless Gateway.

4.3.2. 4-Conductor Belden Wire; A cable made up of 4 stranded coppers (black, white, red, and green), 18 AWG with TTFN insulation. Serves as a *signal* and *voltage (5V DC)* carrier between the *BTX board* and the *MS-200 60 pulse Motion Sensor*. Use the white wire for P(ulse), the black wire for GND, and the red wire for +5V. The green wire hooks up to Earth ground.

4.4. CONNECTING BTX MODULES TO SENSORS

4.4.1. BTX Thermocouple Leadwire Cable; Same as 4-TC Shielded Leadwire Cable. it runs from a grouping of Temperature Sensors to the input side of a BTX board. (See figure 8).

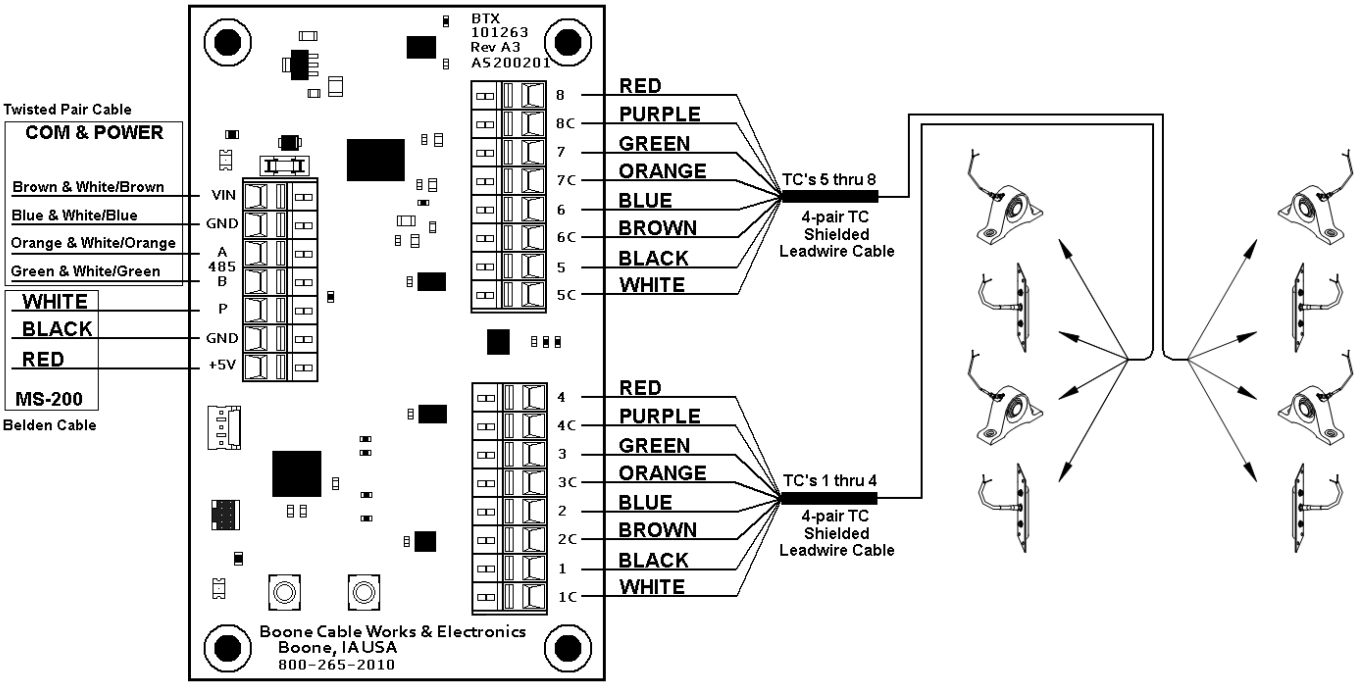

Figure 8. BTX Connections to sensors

4.4.2. Terminations; are done where the cables are connected to the circuit boards. BTX boards use a Cage-Clamp type terminal blocks. (See Figure 9). For the gauges of wire used in our cables, we have found that this spring-pressure provides a more reliable connection regardless of temperature variations, vibration, and corrosive environments. They also reduce overall wiring and maintenance time. (See figures 6, 7 & 8).

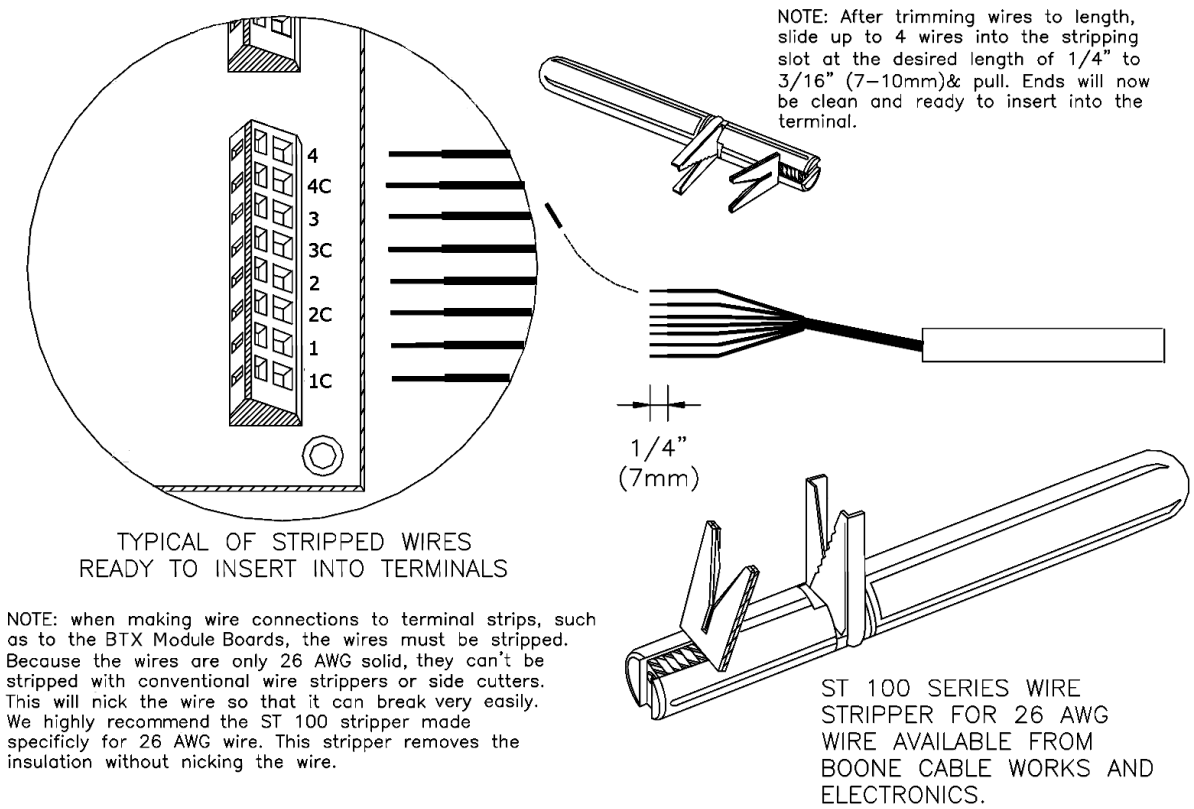

Figure 9. Termination of Wires

4.5. SPLICING

Good connections are critical to the integrity of the system. Attention to detail here will yield a trouble-free system and greatly reduce startup problems. Wire-to-wire splicing, is done for example where the sensor pigtails are connected to the *4-pair TC Shielded Leadwire Cables* so it can be extended to the *BTX Module Board.* (See figure 8). It is also done where a section of *Twisted Pair Wire* needs to be extended or branched off in another direction. Splices should never be made and pulled into the conduit run.

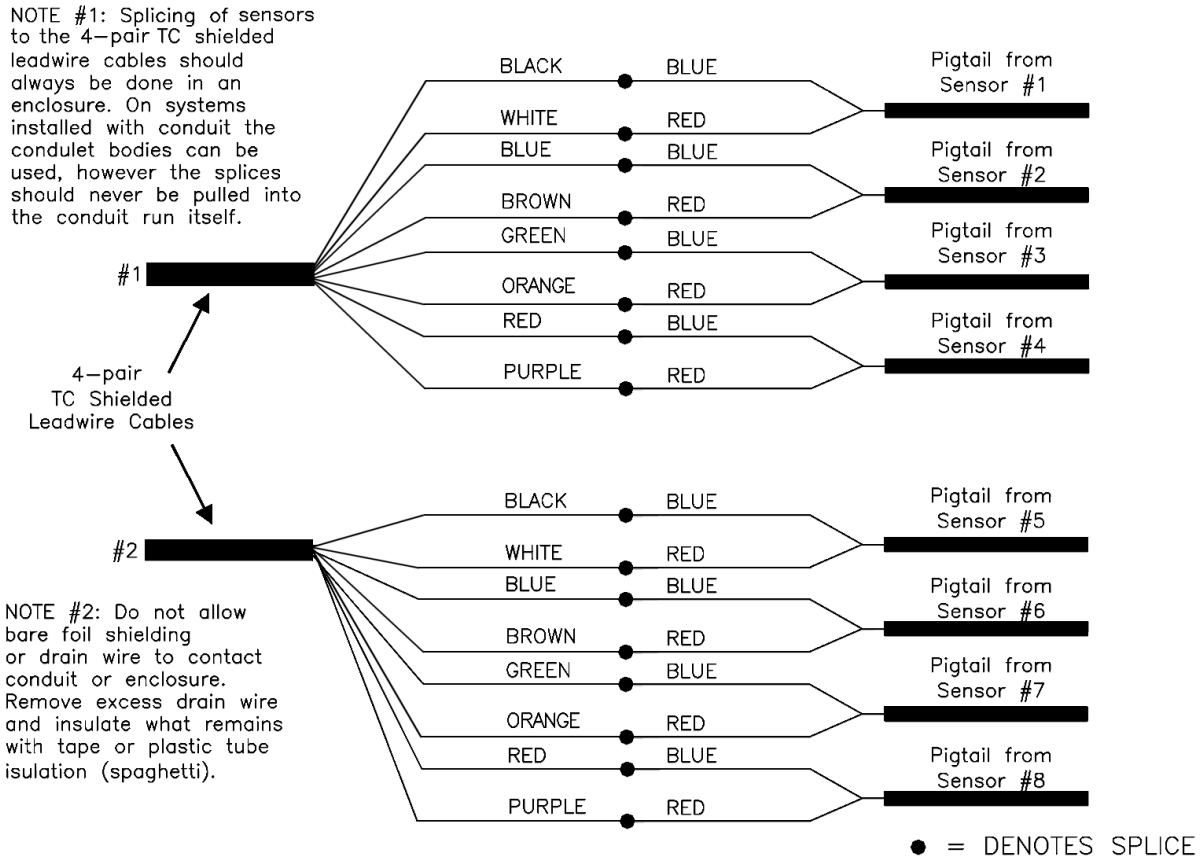

Figure 10. Splicing

4.5.1. Wire-To-Wire Splicing; Wire-to-wire splicing should be done inside a splice box or in a condulet fitting. A splicing enclosure will provide mechanical protection from collateral damage related to moving machinery, or vigorous housekeeping. The splice is more vulnerable to environmental effects and physical damage than the remainder of the wire run, which is still in its jacket. A splice enclosure also keeps them free of dirt and moisture. Splicing enclosures should be placed in an easily accessible location and has a proper dust tight cover. (See figures 10 & 11).

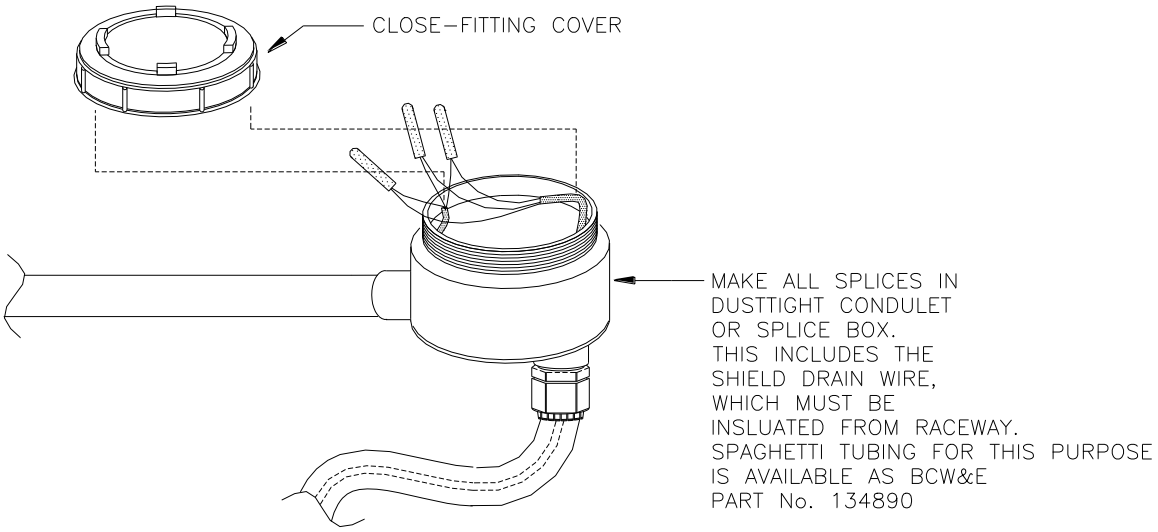

Figure 11. Splicing in a fitting

4.5.2. Crimps; All wire-to-wire splices should be made with Line B grease filled wire connectors. These connectors and the proper crimping tool for installation are available from BOONE CABLE WORKS AND ELECTRONICS and can be ordered with the system. These crimps offer the highest degree of reliability, insulation, and moisture protection of any we have found. They also have the added benefit of not requiring the stripping of the insulation from the individual conductors when connecting two 26 AWG wires. The crimps are insulated outside and are grease filled inside. The grease retards corrosion and resists water, thus making a good conductive splice that is well insulated. After the splice bundle is completed, several wraps of good quality electrical tape will provide abrasion resistance, and make for a neat looking splice. Please refer to the detailed splicing section, and figure 12 for specific steps related to making wire connections.

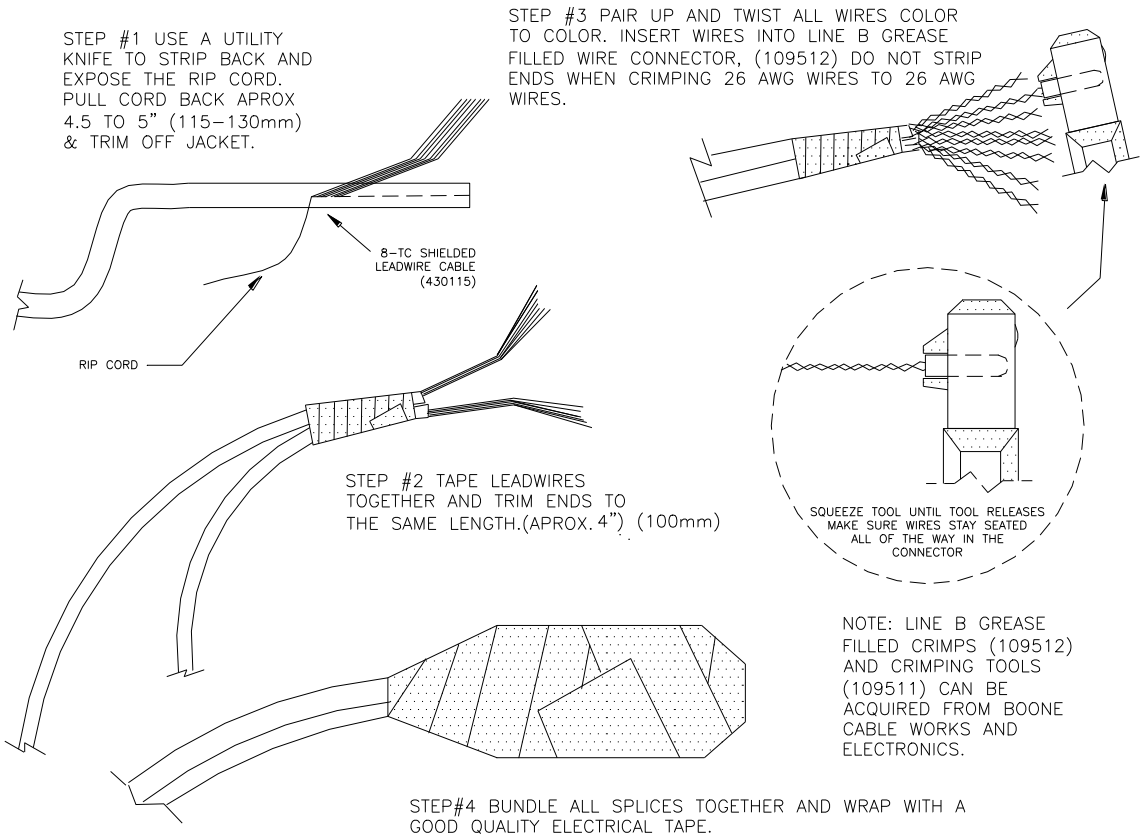

Figure 12. Cable Splicing with Crimps

4.5.3. Detailed Splicing Instructions;

4.5.3.1. When making same size wire to wire connections, first pair up the two or more cables and tape them together about 5" to 6" (13-15 cm) from the end.

4.5.3.2. Locate the parallel ridge that runs the length of the cable. You will have to look closely to see it. This ridge identifies the location of the nylon ripcord under the jacket of the cable.

4.5.3.3. After you have exposed about an inch (25 mm) of the ripcord you can now grab it with a pair of needle nose pliers and pull it back to the tape, splitting the jacket as you go.

4.5.3.4. After you have done this to all cables to be spliced, you can trim off the jacket at the tape, exposing the individual wires inside.

4.5.3.5. Gather the wires in bundles of the same color. The (2) *4-pair TC Shielded Leadwire Cable(s)* wires coming back from the sensors are eight colors and consist of Black, Blue, Green, Red for the coppers and White, Brown, Orange, Purple for the constantans. The *Twisted Pair Wire,* used for communication and power has no shield or constantan; all are copper.

4.5.3.6. Trim all wire bundles to the same length of about 4.5" to 5" (115-130mm) long and separate bundles.

4.5.3.7. Pair up the wires color to color and twist them together as in Figure 10. If more than 3 wires are to be spliced under the same crimp, you must strip off the insulation before twisting.

4.5.3.8. After all of the pairs have been twisted, slide a line B Grease filled crimp over each pair, being certain that they are fully seated.

4.5.3.9. Use only the appropriate crimping tool designed for proper seating of the crimps to ensure that a good connection is made on each twisted pair.

4.5.3.10. As long as there are no more than three wires under a crimp splicing can be accomplished without stripping the individual conductors. If stripping is needed it should be done using the appropriate tool referred to in figure 9.

4.5.3.11. Differing Wire Gauges - In some situations, wires of different gauge sizes must be spliced. One such connection of this type is where the sensor pigtail connects to the remote extension wires. In these situations, it is necessary to strip both ends before pairing up and twisting them together. Be sure that the crimp is fully seated over the bare ends and that no bare wire is sticking out from under the crimp. Use the crimping tool and finish the connection as usual.

4.5.3.12. (Drain Wire - Be sure to maintain electrical continuity between all shield drain wires at each splice location, and at termination points. This shield drain wire must terminate at earth ground in the Instrument only. It should not be grounded to the conduit or other structures at splice locations.

4.6. TEMPERATURE SENSORS

Bearing Temperature and Rub Sensors are classified as simple apparatus and record the temperature increases of monitored equipment through the use of Thermocouple technology. These devices are passive transducers and do not generate any significant voltage (<20mV DC). As the temperature increases these thermocouples indicate the proportional increase in temperature of the effected equipment. These devices are connected back to the BTX Module through the use of 1/2" conduit.

4.6.1. Belt Alignment Rub Block; (401541) A "RUB" includes a conduit-ready (½-inch size) coupling welded to a mounting plate. A half-round block of brass stock is bolted to the plate. It is prepared to accept the Drill & Tap Type Temperature Sensor. (See figure 13).

4.6.1.1. Drill & Tap ⅛-Inch NPT Probe; (401608) is intended for Rub Blocks associated with belt alignment. The thermocouple is embedded in a brass fitting that has ⅛-Inch NPT threads.

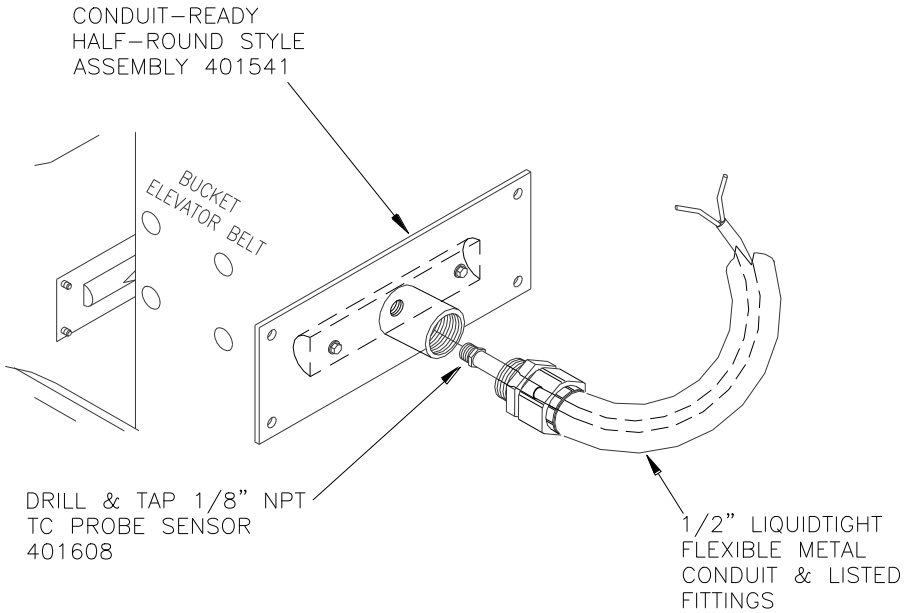

Figure 13. Rub Block & Drill & Tap ⅛-Inch NPT Probe Sensor

4.6.1.2. Installing Alignment Rubs on a Bucket Elevator Belt;

4.6.1.2.1. Measure the diameter of the tail pulley to establish the track of the belt within the leg casing relevant to the desired location of the rub block. This can usually be accomplished through the removal of the inspection plate or inspection door.

4.6.1.2.2. If you still cannot locate the exact track of the belt by the previous method, then the following alternative may help. Measure out one inch from the inside of the trunk casing of the leg. (See figure 14)

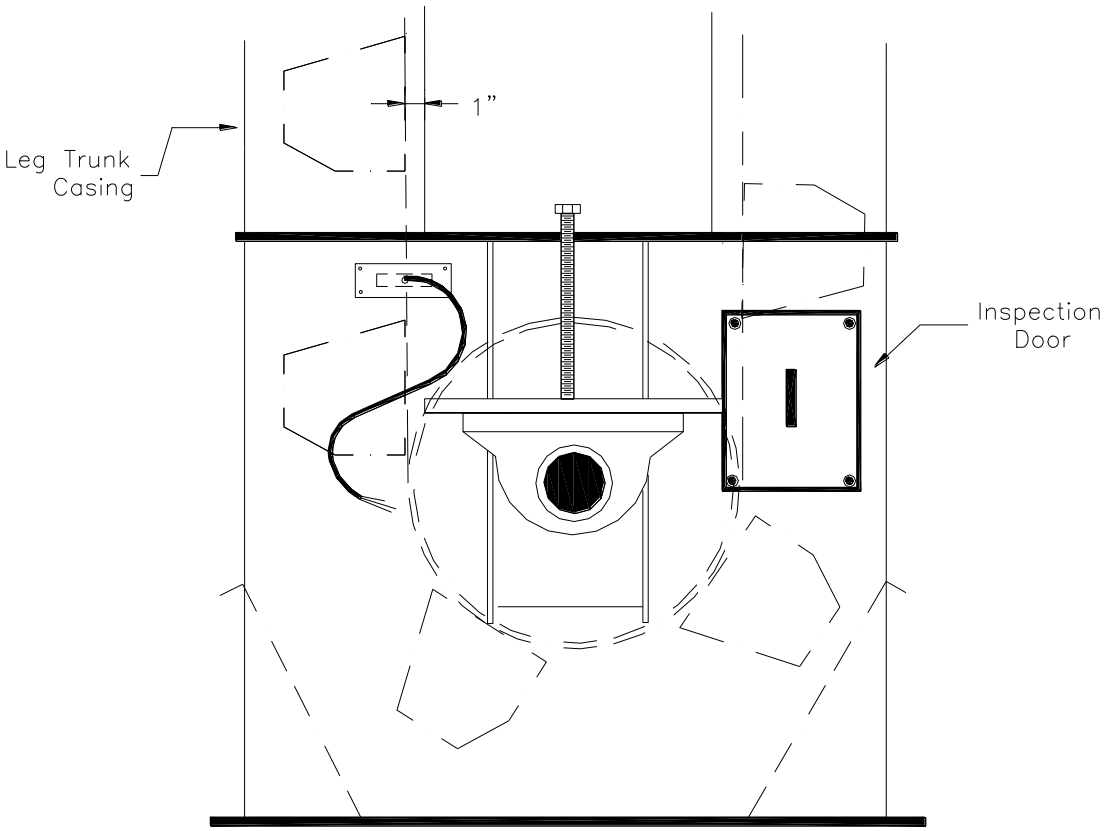

Figure 14. Rub Location on Elevator Tail

4.6.1.2.3. Extend this down in a vertical line to the desired height from the floor for the rub; at this point make your vertical and horizontal alignment marks. With a ¼" drill bit, make a hole at the intersection of these two marks. Probe through the hole with a small, stiff piece of wire to locate the belt track exactly. Now you can locate the vertical alignment mark that will serve to center the rub on the belt. This method will usually allow you to get close enough that the ¼" hole will be covered by the rub mounting plate when finished.

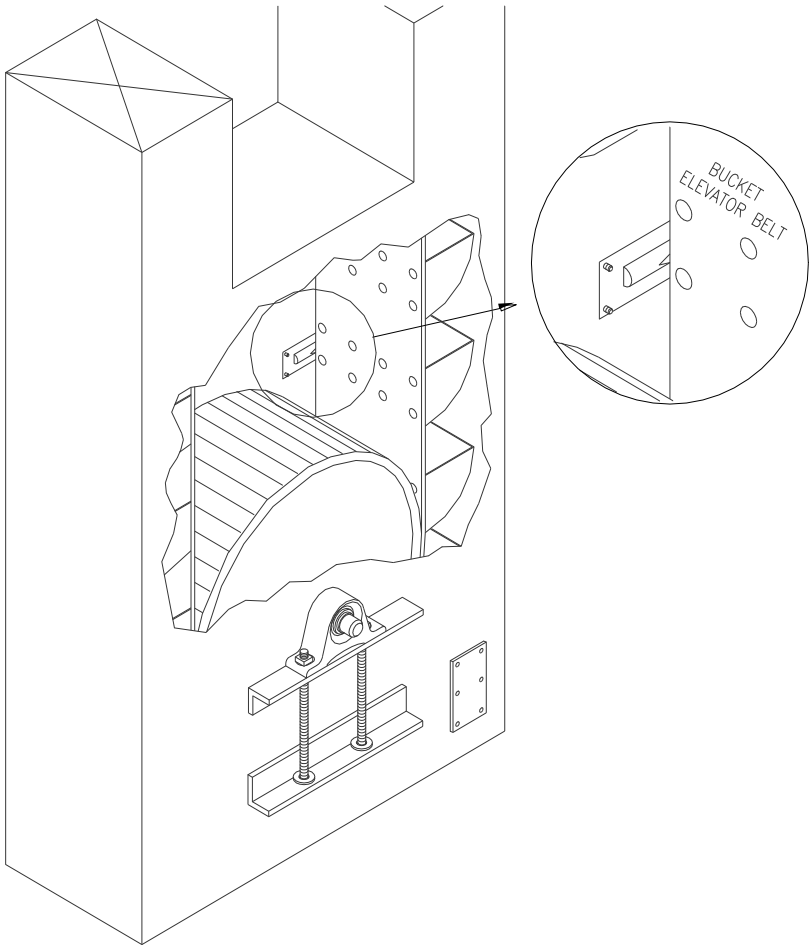

Figure 15. Rub Sensor

4.6.1.2.4. After you have located and marked the vertical belt alignment mark with a pencil or marker, then you can mark the horizontal height, being mindful of obstructions that might interfere with flush mounting of the rub. NOTE: the height selected should ideally be the same for all the rubs on the leg, and should take into account that the tail, pulley is adjustable up and down to account for belt stretch and load. Remember to place the rub so that it will engage the belt regardless of the location of the pulley.

4.6.1.2.5. Next take the appropriate template provided, see Figure 20. and place it against the leg casing in alignment with the vertical and horizontal alignment marks that you have made previously in steps one and two. Dashed lines have been provided on the template for this purpose. The template is the exact size of the rub mounting plate to aid you in locating the rub away from obstructions. Minor adjustments can be made so long as the belt will still contact the brass portion of the rub fully should it track out of alignment. The location of the brass rub is indicated by the 5-1/8” x 1-¼” cutout on the 3” x 8” template. You can use these as guides if minor adjustments are necessary. In some cases, you may have to relocate the rub altogether in order to find a flush mounting location that still lines up with the belt. (See Figure 15). The template is punched so that you can use it to mark out the mounting holes for the rub as well.

4.6.1.2.6. Once you have found a suitable mounting location, use the center cutout of the 3 x 8" template to mark the minimum area of the leg casing that must be removed to allow for the rub. Use a hole-saw to make an opening for the reciprocating saw (Saws-All). The hole can be cut using a reciprocating saw.

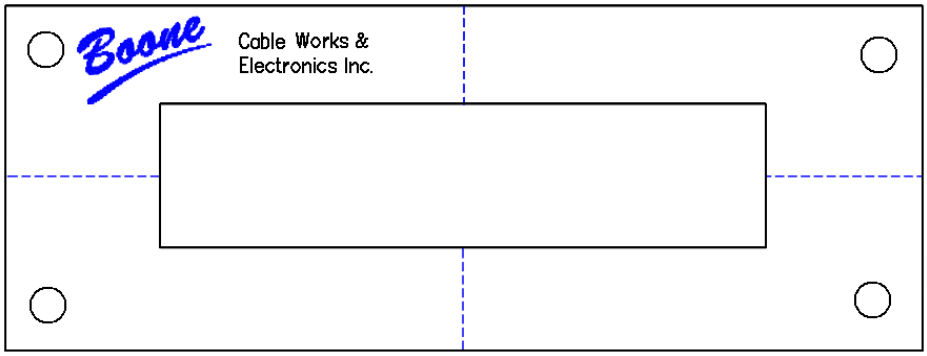

Figure 16. Rub Installation Template

4.6.1.2.7. Be careful not to cut the belt when you make your cutout.

4.6.1.2.8. After you have made the appropriate size hole in the leg casing to accommodate the rub block, you can install the Drill & Tap Sensor into the pre drilled and tapped 1/8" NPT hole provided in the rub block. (See Figures 13 & 17).

4.6.1.2.9. Now you can mount the rub and sensor assembly in the opening using the four self-drilling "TEKS" (extra-wide washer head, serrated to prevent stripping) screws provided with each rub assembly.

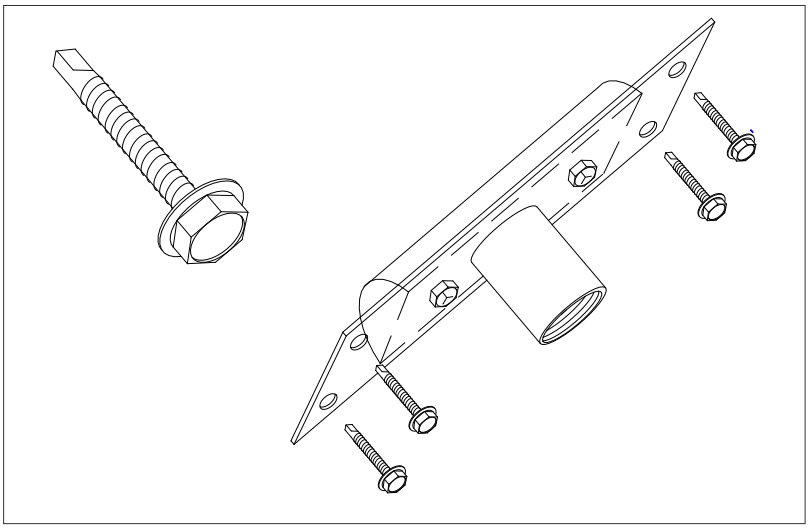

Figure 17. Mounting Half-Round Rub with Tek Screws

4.6.1.2.10. Once the rub assembly has been installed, be sure to use a product such as RTV silicone or Liquid Metal seam sealer to form a dust tight seal around the outside of the rub mounting plate.

4.6.1.2.11. Conduit is recommended to protect the probe pigtail cable. This can be achieved with Liquid tight Flexible Metal Conduit (LFMC) and fittings. LFMC is particularly useful if the bearing must be able to move. Leave enough slack in the pigtail and LFMC to accommodate this movement. The conduit ready adapter is meant to facilitate connection to the LFMC.

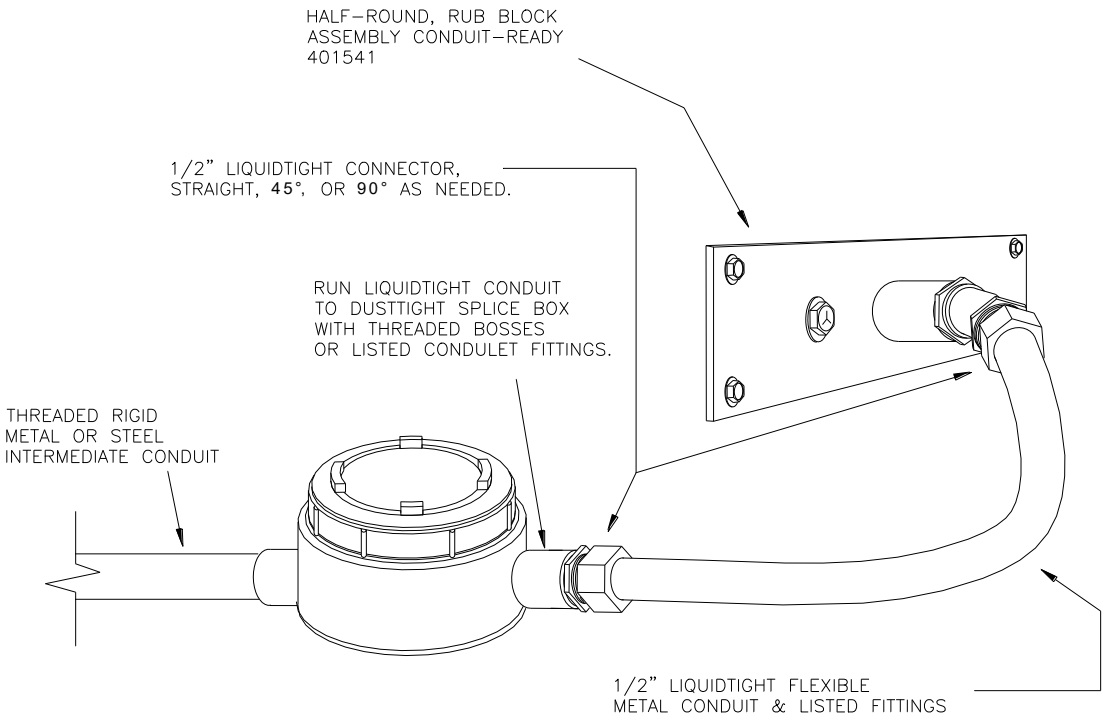

Figure 18. Conduit-Ready Rub

4.6.1.2.12. Locate and install all subsequent rubs and sensors in the same manner as described above.

4.6.1.3. Installing Alignment Rubs on a Horizontal Conveyor Belt;

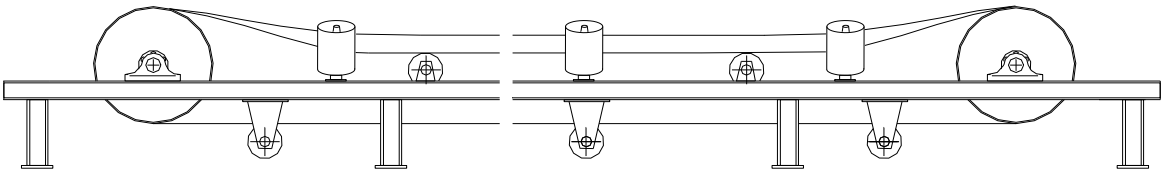

Figure 19. Open Frame Belt Conveyor

4.6.1.3.1. In some cases, it is desirable to mount rub blocks on open frame conveyors. Some suggestions on possible mounting configurations can be found in figure 20.

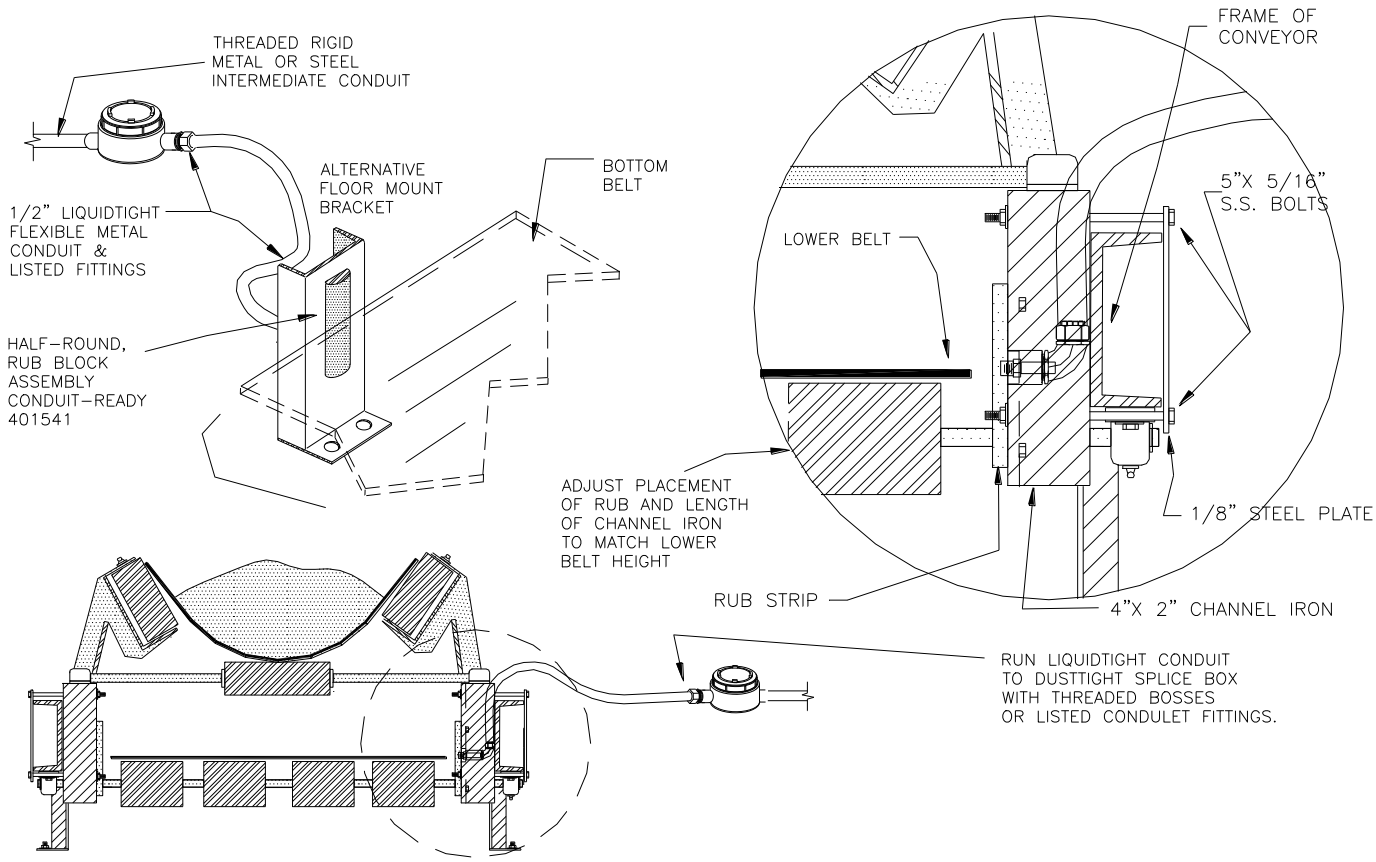

Figure 20. Rub Mounted on an Open Frame Conveyor

4.6.2. Bearing Probe; (401605) is inserted into the grease fitting of the bearing housing. The thermocouple is embedded in the tip of the probe tube.

4.6.2.1. Bearing Probe Installation;

4.6.2.1.1. Remove grease fitting (Zerk) from bearing housing. Most bearing housings are drilled and tapped for 1/8" NPT grease fittings (Zerks). If it is tapped for 1/8" NPT, proceed by inserting male threaded end of 1/8" NPT Steel Street Tee (200010) into the hole that has been vacated by the grease Zerk. Be careful not to over tighten. Screw existing Zerk into the side opening of the Tee and aim it so that it can be greased easily. (See Figure 21).

4.6.2.1.2. Some bearings are tapped for Zerks using ¼" x 28 SAE threads. "Boone Cable Works" can provide you with special probes, compression fittings, and an adapter that will fit these locations.

4.6.2.1.3. Much larger bearings occasionally use a housing tapped for ¼" NPT zerks. "Boone Cable Works" can also provide adapters for these locations. The standard Tee, compression fitting, and probe are used with this adapter. However, a new 1/8" NPT Zerk must be used, and occasionally an extension will be in order. Zerks, Extension Nipples, and Adaptors can usually be found locally at an auto parts outlet if needed, or can be purchased from B.C.W. & E.

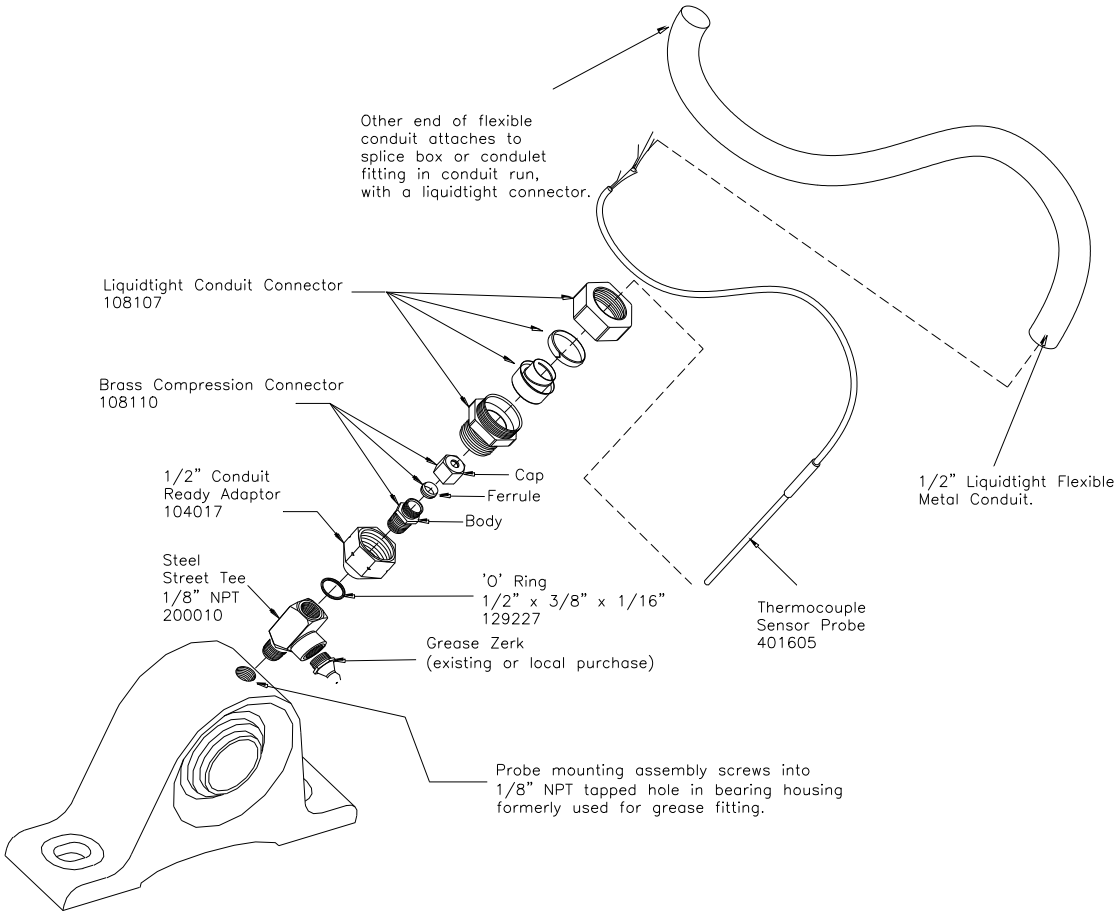

Figure 21. Bearing Probe Sensor and Fittings

4.6.2.1.4. After the Tee and Zerk have been installed, screw the compression fitting into the top of the Tee.

4.6.2.1.5. Thread the compression nut and the compression ferrule onto the stainless-steel bearing probe. Insert the assembly through the top of the compression body and down through the Tee until it bottoms out on the bearing race. Now withdraw it about 1/16" to 1/8" and tighten compression nut until snug + ¼ turn. The compression nut must be tight enough to resist hydraulic pressure applied to it by greasing, but not so tight as to excessively distort the probe.

4.6.2.1.6. Conduit is recommended to protect the probe pigtail cable. This can be achieved with Liquid tight Flexible Metal Conduit (LFMC) and fittings. LFMC is particularly useful if the bearing must be able to move. Leave enough slack in the pigtail and LFMC to accommodate this movement. The conduit ready adapter is meant to facilitate connection to the LFMC.

5. MOTION SYSTEMS

The following components and connections are what you will need to know to make the motion part of the system run.

5.1. FEATURES

5.1.1. Fail – Safe Shutdown Operation; The BTX Monitor has been designed such that only when it is scanning for hazards will it allow the interlocked equipment to be started and kept running. When legitimate slowdowns occur, a shutdown alarm will be generated by the BTX Monitor. Motion Monitors for Elevators must wind up in a state that guarantees a Fail-Safe shut down condition. Not having Fail-Safe shut down capability can be disastrous. Hazard Monitors should be part of the interlocking circuitry that automatically trips the motor controls and falls into a safe condition in the event of a failure or breakage in any part of the circuit. If any part of the system fails, an alarm signal is immediately generated. This can come in the event of a true alarm condition or failure in the monitoring system (power loss, accidental breakage, shorting). When the *Run Input Signal* is high indicating the conveyor is powered, at that time the output Relays are energized to latch the interlocking circuitry to keep the system running. In the event of a system failure, output relay switches to open or alarm condition. Any disruption causes an unlatching of normal state and thus a fail-safe condition. This action complies with NFPA 61, §7.4.1.5 with relays to shut-down power to drive motor, feed conveyor, and actuate an alarm. OSHA Standard 29 CFR – 1910.272 is also covered.

5.1.2. Start-up Period Monitoring; Two features help monitor the period before the conveyor reaches full speed.

5.1.2.1. Start-to-Move (STM); From the time that the start button is pushed and the motor is powered, the monitored equipment has "**n**" seconds to begin moving. It does not have to reach normal speed during this time, just begin moving. If no movement is sensed, alarm state is entered and a shutdown is triggered. Thus, preventing catastrophic damage from a "choked" leg

.

5.1.2.2. Acceleration to Normal Speed; After the equipment starts moving, instantaneous (differential) acceleration is checked so that slippage will not generate heat at the contact surface of the drive pulley lagging and belt. Minimum acceleration must be maintained throughout this period. If proper operational speed (below shutdown %) is not accomplished in **X** seconds, a warning state is entered and a shutdown is triggered. If the operational speed is between the shutdown and alarm percentage, an alarm condition is triggered. Acceleration must be positive or zero (non-negative). Once the speed is brought above alarm level, the BTX system is set for regular Belt-Slip Monitoring. The Fail-Safe operation also applies during this period.

5.1.3. Speed Sensor (MS-200-60); is a rotary style, direct shaft-mounted sensor. This sensor is bi-directional, which means it can be mounted on either side of the equipment to be monitored. The standard MS-200 Motion sensor generates 60 digital pulses @ 1.6 Volts output per shaft revolution. It operates from 5V DC power, detecting speeds up to 500 RPM. The MS-200 is designed for extreme conditions and rigorous applications. It has an operating temperature between -50 °F and +150 °F. All electronics are enclosed in a corrosion-resistant machined aluminum housing that is dustproof and water resistant.

5.1.3.1. Installation:

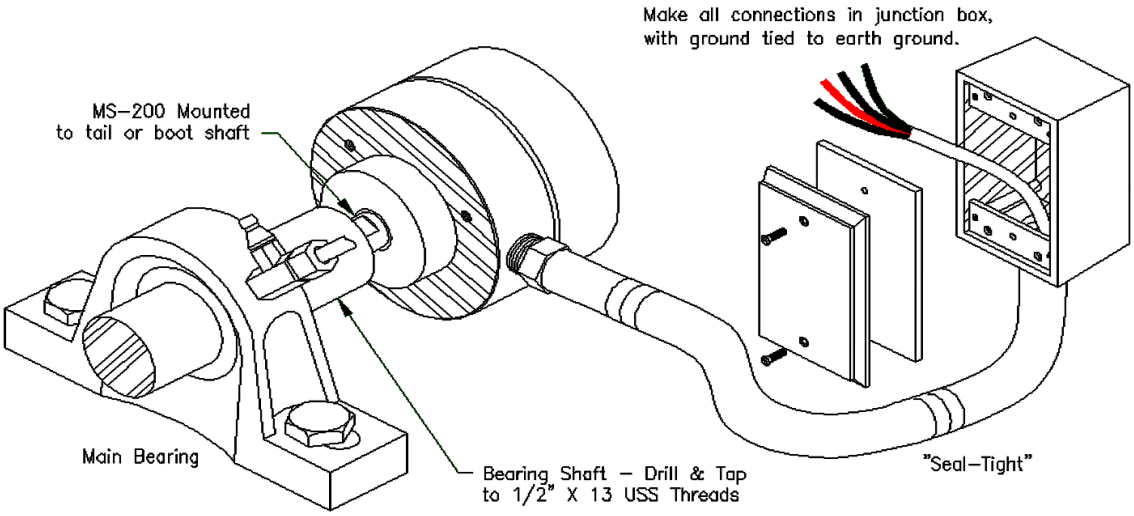

Figure 22. MS-200-60 Mounting to Bearing shaft

5.1.3.1.1. Prior to drilling, mark the center of the shaft. With the equipment running, place a pencil on the rotating shaft near its center. As the shaft rotates, the pencil will draw itself to the center and continue to make a dark spot. When the center is found remove the pencil.

5.1.3.1.2. Use a center punch to prevent drill bit from wandering.

5.1.3.1.3. Drill and tap the shaft to accommodate the sensor's ½" x 13 USS threaded shaft (use the recommended drill size and tap). Drill into the shaft as straight as possible and to a depth of a minimum of 1½ inch.

> **NOTE**: Use a heavy-duty low speed drill. If the drill runs to fast the teeth will not bite in and wear quickly. Cutting fluid eliminates excessive heating of the tool and any sparks produced.

5.1.3.1.4. Clean out any debris from the tapped hole and install the MS-200 sensor.

5.1.3.1.5. If the equipment rotates in a clockwise manner, mount the sensor with a locking nut on its shaft.

5.1.3.1.6. Feed the 18 AWG 4-conducter cable through the appropriate "Seal-Tight" from the MS-200 and attach to a junction box. (See figure 22). Use CCL-318 cable to connect from the MS-200 to the BTX Module.

5.1.3.1.7. Make sure to hook the green wire to an Earth-ground connection, located near the equipment.

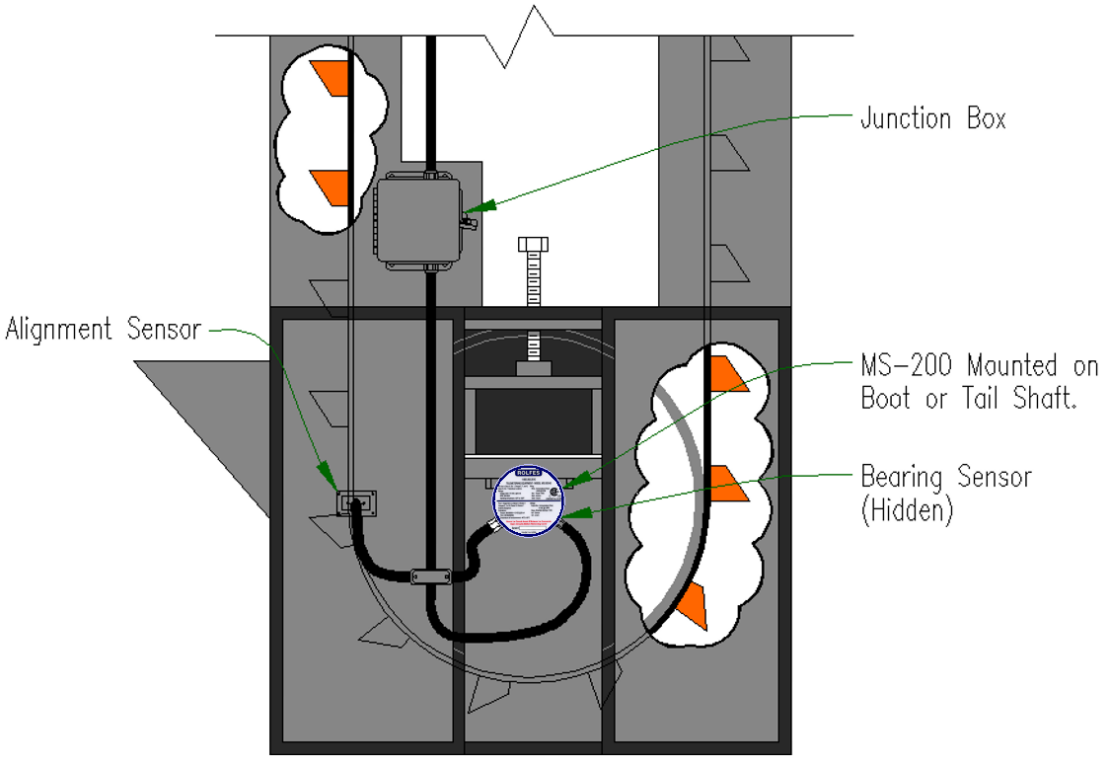

Figure 23. MS-200-60 Mounted to Boot or Tail shaft.

5.1.3.2. Hookup to the BTX Module;

5.1.3.2.1. The white wire from the MS-200 is connected to the green connector, labeled “P” of “Pulse”.

5.1.3.2.2. The black wire from the MS-200 is connected to the dark gray connector (next to the green), labeled “GND”.

5.1.3.2.3. The red wire from the MS-200 is connected to the orange connector, labeled “+5V”.

5.1.4. Warning & Alarm Relay Contacts; Terminals for access to these contacts are located inside the BTX Monitor, mounted to the Din-rail. Normally-Closed Output Relays energize for normal use providing fail-safe operation. They are designed to cause shutdown if interlocked both from slowdown or damage to wiring. Refer to section 5.1 Features. A qualified electrician should do electrical hook ups on the Warnings and Alarms side of the board, where AC line voltage may be used.

6. **GLOSSARY**

CONSTANTAN: A copper-nickel alloy (shiny silver) used as the negative lead in Type T thermocouples.
CRIMPER: A pliers like tool used to compress the crimps to the proper pressure and configuration.
CRIMPS: A splicing device primarily used on the light gauge lead wires. It consists of an outer plastic jacket, an inner perforated metal which bites through the insulation and into the conductors, and an inner watertight sealant (silicone grease).
DRAIN WIRE: A non-insulated wire in contact with parts of a cable, usually the shield, and used in the termination to that shield and as a ground connection.
ELECTROMAGNETIC INTERFERENCE, EMI The result of stray voltages and/or currents coupling between electronic systems adversely affecting electronic equipment and cause intermittent data problems.
JACKET: The outer protective covering of a cable.
LEADWIRE: A multi-conductor extension cable used to extend from the thermocouple to a remote switching unit (BTX).
SENSOR: A device that responds to a physical stimulus (heat, light, sound, pressure, motion, flow, etc.) and produces a corresponding electrical signal.
SHIELD: A tape (foil), serve, or braid placed around cables, to prevent signal leakage or interference.
THERMOCOUPLE, TC: A temperature sensor created by joining two dissimilar metals. The junction produces a small voltage as a function of the temperature.
EMBEDDED SYSTEM: A specific-purpose computer that is physically embedded within a larger system (grain elevator). Its primary purpose is to maintain some property or relationship (no hot spots or slow motion) between the other components of the system in order to achieve the overall system objective (a safe grain elevator).

BTX
OPERATORS
MANUAL

BEFORE ANY WORK IS PERFORMED ON THIS UNIT, THE KEY SWITCH ON THS SIDE OF THE UNIT SHOULD BE TURNED OFF AND THE ELECTRICAL FEEDER CURCUIT SHOULD BE LOCKED OFF AND TAGGED ACCORDING TO YOUR COMPANY'S LOCKOUT AND TAGOUT PROCEDURES.

TABLE OF CONTENTS

1. MAIN SCREEN

1.1 BUTTONS

MAIN / OVERVIEW

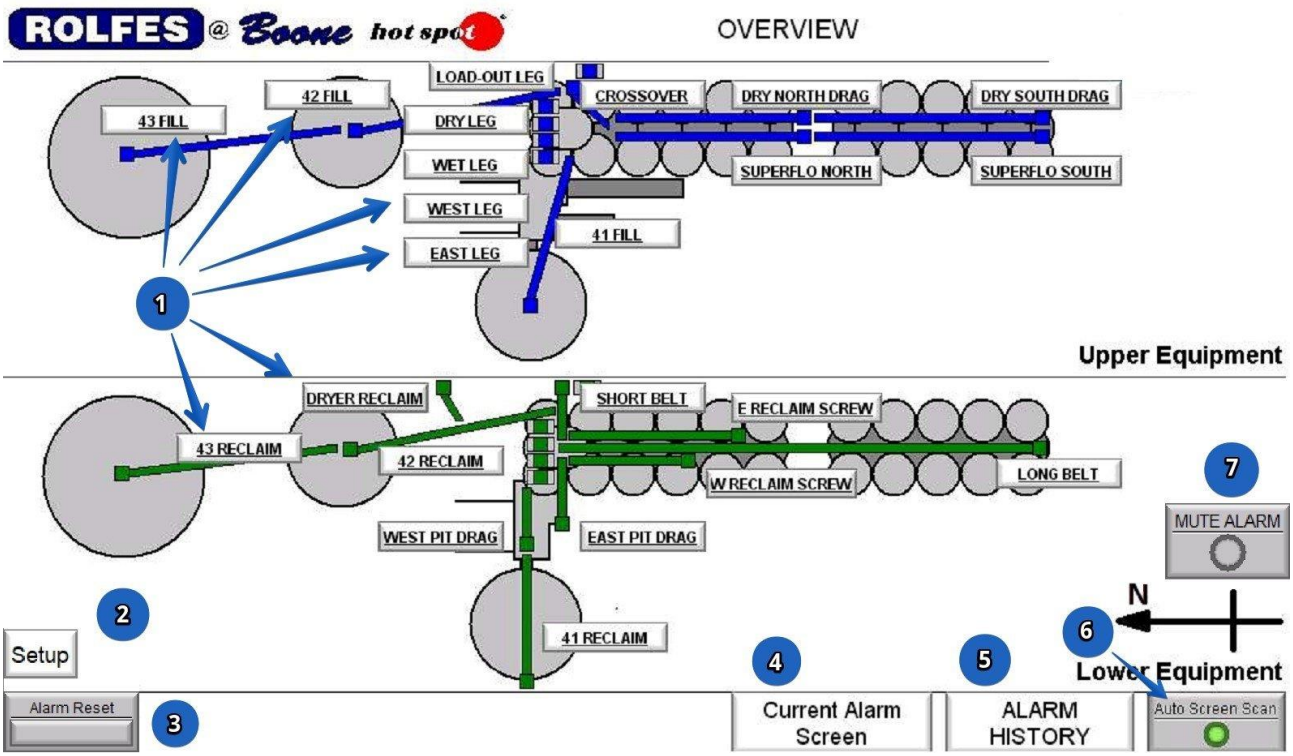

1. **Go to Equipment Screen**; Each of these buttons will display a screen for that piece of equipment showing current temperatures and allowing access to other screens and information.

2. **Go to Setup Screen**; This button is password protected and will display a setup screen that allows for the editing of certain options within the monitoring system.

3. **Alarm Reset**; This button allows for the resetting or clearing of any alarm that is present, provided that the alarm condition has passed.

4. **Current Alarm Screen**; This button will display any current alarms in the system.

5. **Alarm History Screen**; This button will display any past alarms in the system.

6. **Auto Screen Scan**; This button allows the display to cycle through all equipment screens (pausing for a few seconds on each one) when the indicator is 'Green'. When the indicator is 'Gray' the display will not cycle through the screens.

7. **Mute Alarm;** This button will mute both the built-in 'Alarm Buzzer' (mounted below the HMI) and the optional 'Remote Alarm Horn' for five minutes, if an alarm is present.

1.2 ALARM INDICATORS

MAIN / OVERVIEW

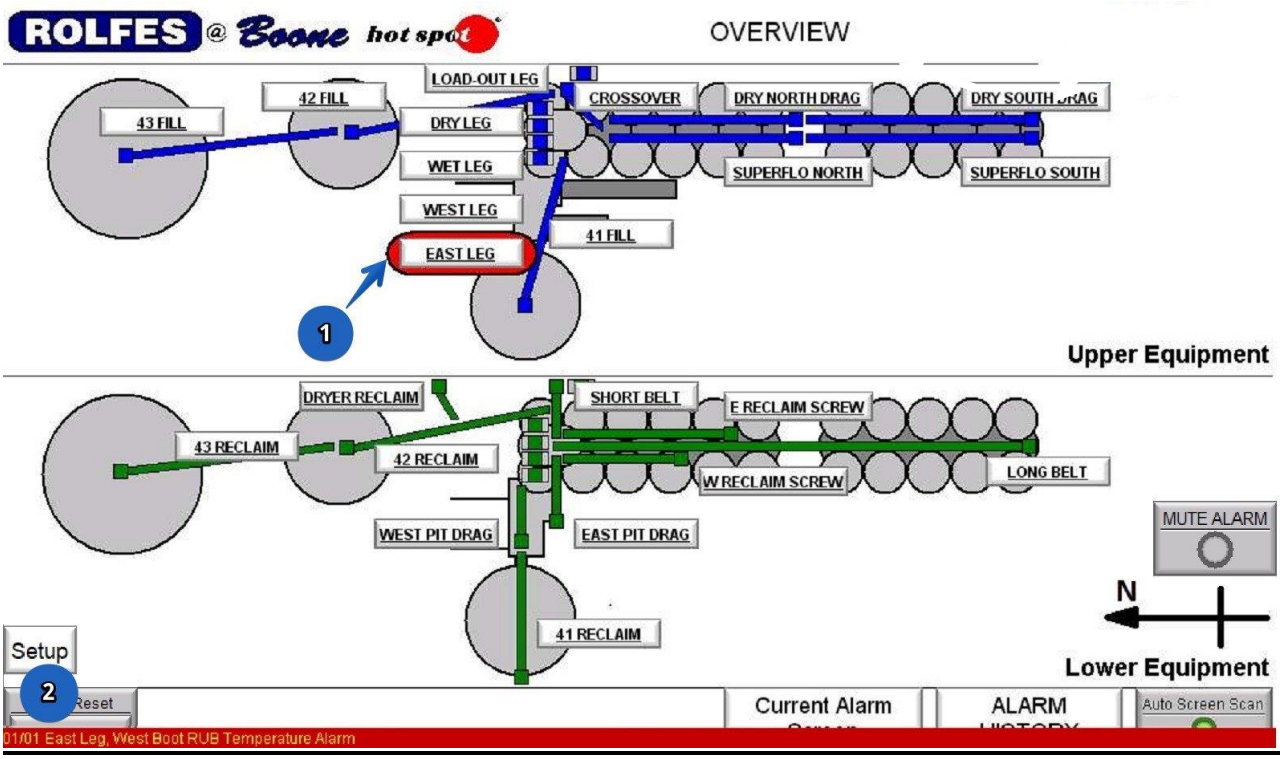

1. **Red Highlight;** This indicates there is an alarm present with this piece of equipment. A 'Yellow Highlight' (not shown) indicates that there is a warning present on this device.

2. **Active Alarm Banner;** This banner will appear at the bottom of the display, when any alarm is present. The alarm message will give the name of the equipment and which sensor is indicating an alarm.

1.3 MAIN SETUP (PASSWORD PROTECTED)

SETUP VIEW

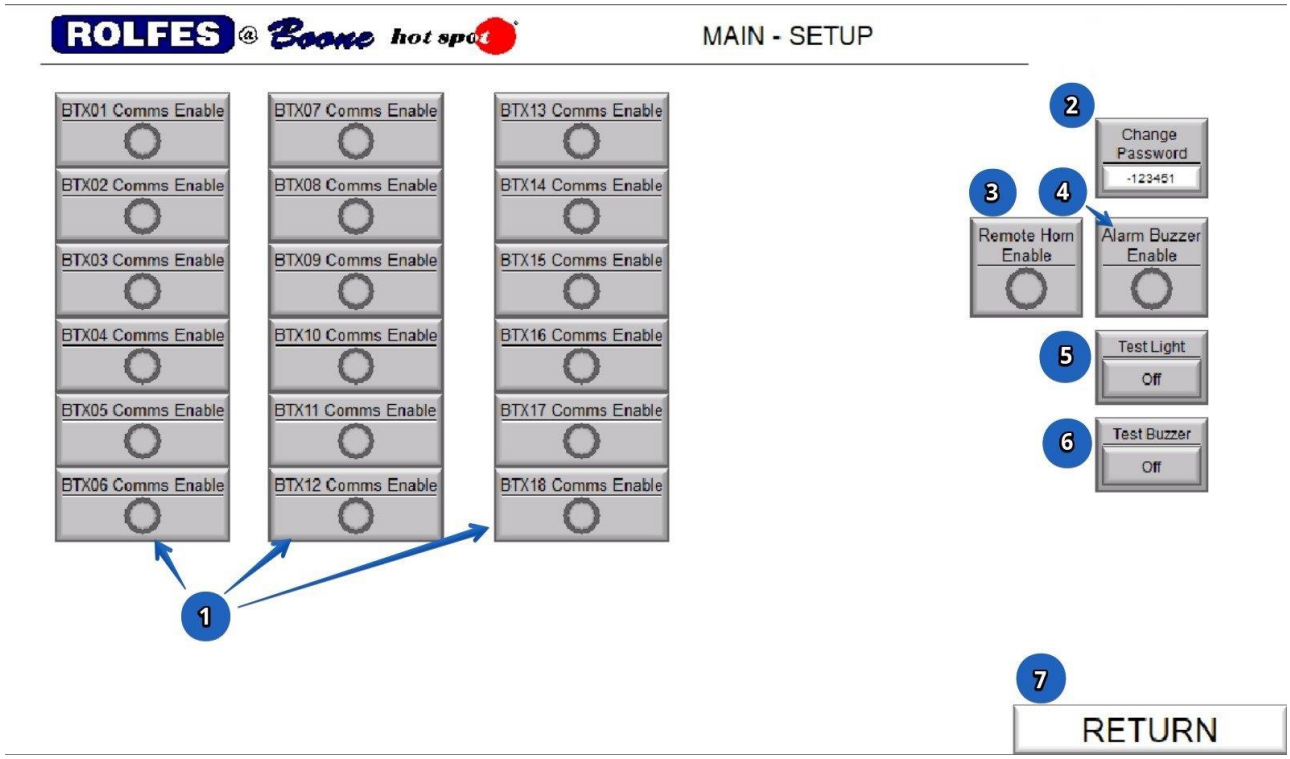

1. **BTX## Comms Enable;** These buttons allow the communications to be toggled On/Off for each BTX board in the monitoring system.

2. **Change Password;** This button will display a numeric entry key pad for changing the current screen password.

3. **Remote Horn Enable;** This button enables the optional 'Remote Alarm Horn' to sound when there is an active alarm in the system, when the indicator is 'Green'. When the indicator is 'Gray' the 'Remote Alarm Horn' will never sound.

4. **Alarm Buzzer Enable;** This button enables the built in 'Alarm Buzzer' (mounted below the HMI) when the indicator is 'Green'. When the indicator is 'Gray' the 'Alarm Buzzer' will never sound.

5. **Test Light;** This button allows for testing the 'Alarm Light' (mounted below the HMI) when the button is pressed.

6. **Test Buzzer;** This button allows for testing the 'Alarm Light & Buzzer' (mounted below the HMI) when the button is pressed

7. **Return;** This button will return the display to the 'Main / Overview' screen.

2. EQUIPMENT SCREEN (TYPICAL FOR ALL EQUIPMENT SCREENS)

2.1 BUTTONS

EQUIPMENT VIEW

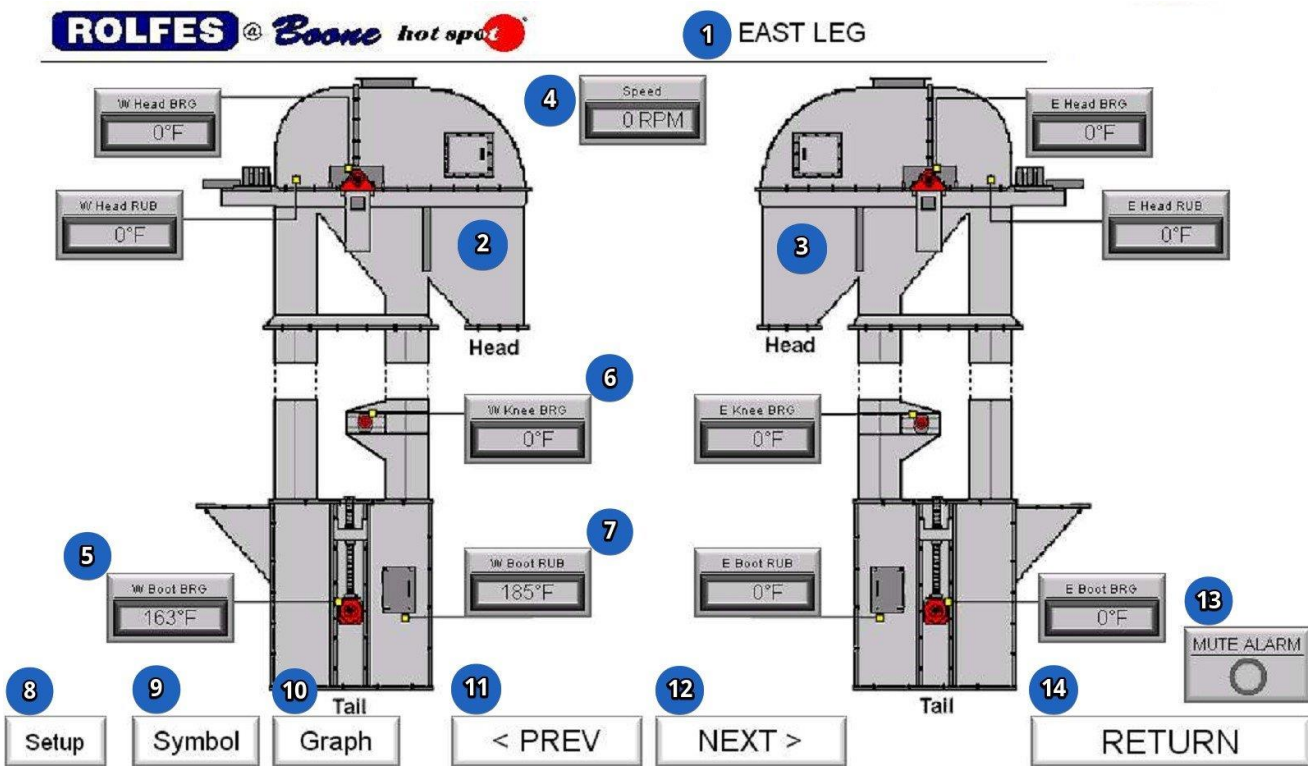

1. **Equipment Screen Name;** This the given name for this particular piece of equipment.

2. **Side View 1;** This is the first side view for this piece of equipment (in this case it is the West side).

3. **Side View 2;** This is the second side view for this piece of equipment (in this case it is the East side).

4. **Speed Display;** This optional display shows the current speed (in RPM) for this piece of equipment. If the speed drops below the 'Warning Setpoint' a 'Yellow Highlight' appears around the display. If the speed drops below the 'Alarm Setpoint' a 'Red Highlight' appears around the display & the Alarm Banner will appear at the bottom of the screen

5. **Boot BRG (Bearing) Temperature Display;** This display shows the current temperature (in Degrees F) as read from this particular sensor. If the temperature rises above the 'Warning Setpoint' a 'Yellow Highlight' appears around the display. If the temperature rises above the 'Alarm Setpoint' a 'Red Highlight' appears around the display. If the temperature rises faster that the Rate-Of-Change settings allow, the appropriate yellow or red highlight will appear around the offending temperature, and a 'Rate of Change Warning or Alarm' indicate will also appear on the screen.

6. **Boot RUB (Rub Block) Temperature Display;** This display shows the current temperature (in Degrees F) as read from this particular sensor. If behaves in a similar fashion to the previous display.

7. **Knee BRG (Bearing) Temperature Display;** This display shows the current temperature (in Degrees F) as read from this particular sensor. If behaves in a similar fashion to the previous display.

8. **Go to Setup Screen;** This button is password protected and will display a setup screen that allows for the editing of warning & alarm settings and other parameters for this piece of equipment.

9. **Go to Symbol Screen;** This button will display the 'Symbol Legend' screen.

10. **Go to Graph Screen;** This button will display the temperature graph or trend screen for the current piece of equipment.

11. **Go to Next Screen;** This button will display the next piece of equipment down the line.

12. **Go to Previous Screen;** This button will display the previous piece of equipment up the line.

13. **Mute Alarm;** This button will mute both the built-in 'Alarm Buzzer' (mounted below the HMI) and the optional 'Remote Alarm Horn' for five minutes, if an alarm is present.

14. **Return;** This button will return the display to the 'Main / Overview' screen.

2.2 ALARM INDICATORS

EQUIPMENT VIEW

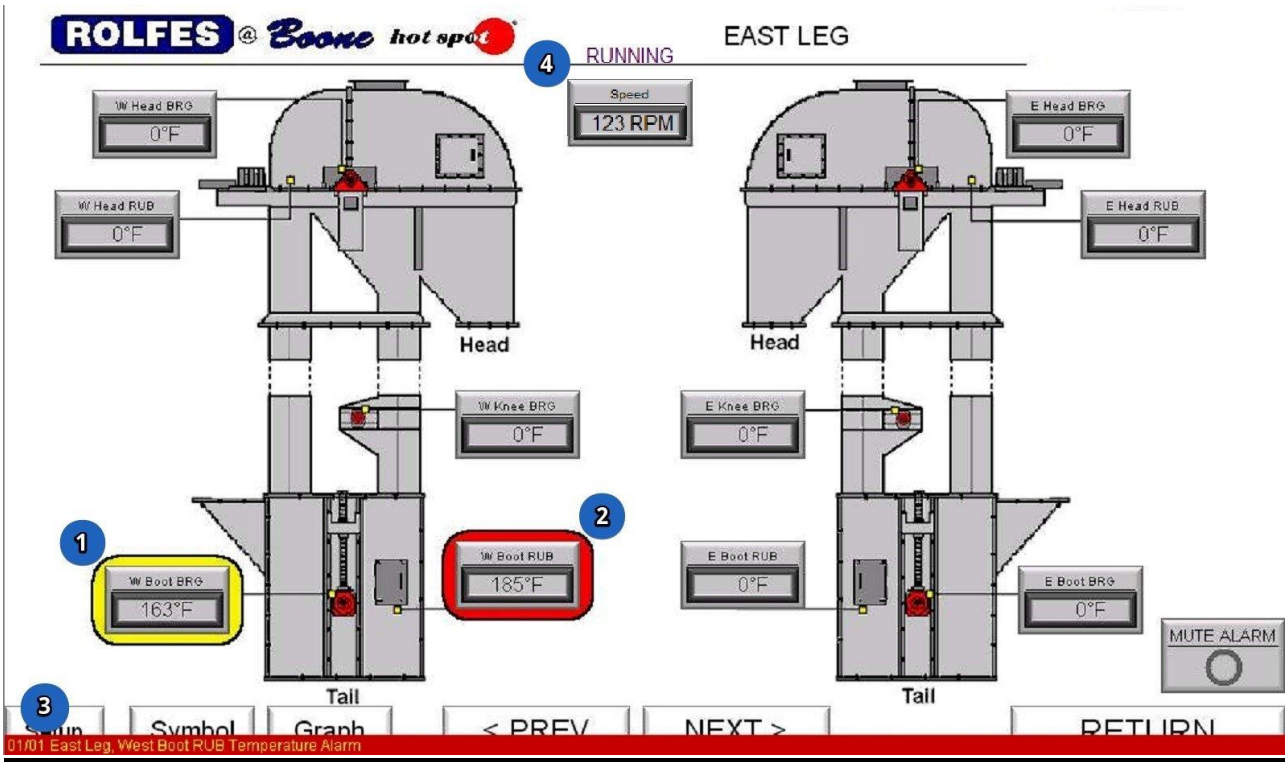

1. **Yellow Highlight;** This indicates there is a warning present with this sensor.

2. **Red Highlight;** indicates that there is an alarm present with this sensor.

3. **Active Alarm Banner**; This banner will appear at the bottom of the display, when any alarm is present. The alarm message will give the name of the equipment and which sensor is indicating an alarm.

4. **Active Speed**; This optional indicator only appears on equipment screens when a speed sensor is present. This indicator is visible only when the equipment's "Running Input" is ON which means that the equipment has been started and is operating. Only when this signal is on will the system evaluate the speed sensor for alarms & warnings.

2.3 EQUIPMENT SETUP (PASWORD PROTECTED)

SETUP VIEW

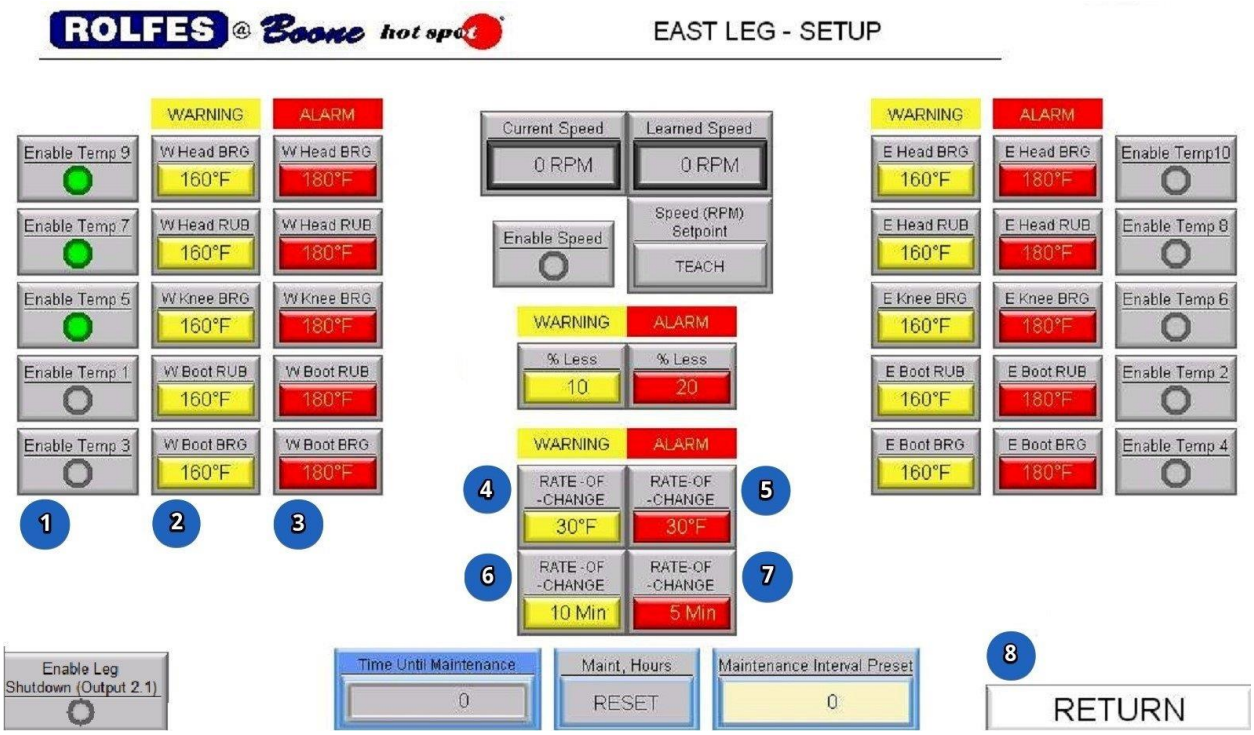

1. **Enable Temp *x*;** When this indicator is 'Green' the corresponding temperature will be displayed and compared against its warning & alarm setpoints. When the indicator is 'Gray' the associated temperature will be set to '0' and no alarms or warnings will trigger.

2. **Warning Temperature Setpoint;** The associated sensor reading is compared against this value. If the sensor reading exceeds this value, a warning is triggered. The default value for warning temperature is **160 °F**. To change this value, press it and a keypad will appear, enter a new value and press **ENTER**.

3. **Alarm Temperature Setpoint;** The associated sensor reading is compared against this value. If the sensor reading exceeds this value, an alarm is latched on. The alarm can be reset once the temperature drops below this value. The default value for alarm temperature is **180 °F**. To change this value, press it and a keypad will appear, enter a new value and press **ENTER**.

4. **Rate-Of-Change Warning, °F;** This value is used as part of the Rate-Of-Change warning calculation. The default value is **30 °F**. This value applies to all temperature sensors on this page. To change this value, press it and a keypad will appear, enter a new value and press **ENTER**.

5. **Rate-Of-Change Alarm, °F;** This value is used as part of the Rate-Of-Change alarm calculation. The default value is **30 °F**. This value applies to all temperature sensors on this page. To change this value, press it and a keypad will appear, enter a new value and press **ENTER**.

6. **Rate-Of-Change Warning, Minutes;** This value is used as part of the Rate-Of-Change warning calculation. The default value is **10 minutes**. This value applies to all temperature sensors on this page. To change this value, press it and a keypad will appear, enter a new value and press **ENTER**.
7. **Rate-Of-Change Alarm, Minutes;** This value is used as part of the Rate-Of-Change alarm calculation. The default value is **5 minutes**. This value applies to all temperature sensors on this page. To change this value, press it and a keypad will appear, enter a new value and press **ENTER**.

8. **Return**; This button will return the display to the 'Main / Overview' screen.

2.4 EQUIPMENT SETUP CONTINUED (PASSWORD PROTECTED)

SETUP VIEW

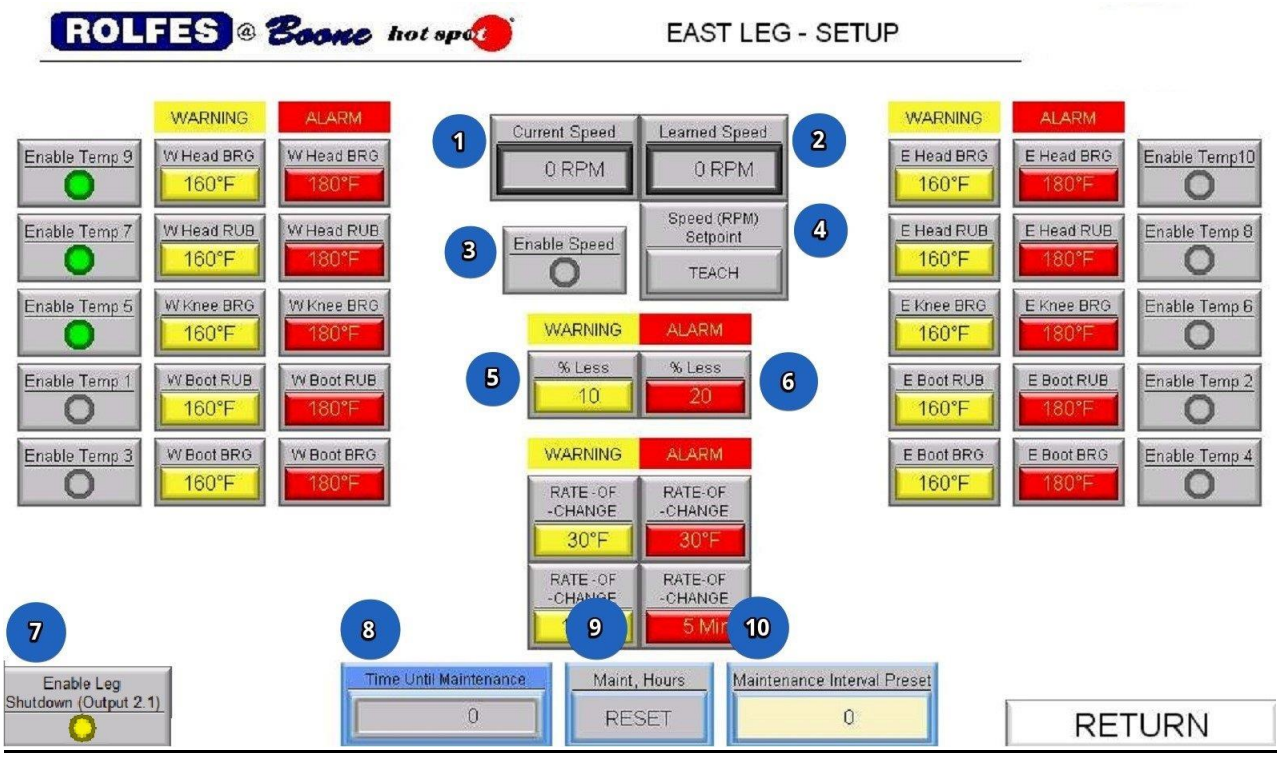

1. **Current Speed Display;** This optional display shows the current speed (in RPM) for this piece of equipment when the appropriate sensor is installed.

2. **Learned Speed (RPM);** This optional display shows the 'Learned Speed' value that is compared to the current sensor reading for triggering alarms & warnings.

3. **Enable Speed;** When this indicator is 'Green' the speed will be displayed and compared against its warning & alarm setpoints. When the indicator is 'Gray' the speed will be set to '0' and no alarms or warnings will trigger.

4. **Teach Speed Setpoint;** This button allows the current piece of equipment's speed to be learned by the system.

5. **Warning Speed Setpoint;** The sensor reading is compared against this value. If the sensor reading drops below this value, a warning is triggered. The default value for warning speed is **10%** of the 'Learned Speed' (RPM) value. To change this value, press it and a keypad will appear, enter a new value and press **ENTER**.

6. **Alarm Speed Setpoint;** The sensor reading is compared against this value. If the sensor reading drops below this value, a warning is triggered. The default value for alarm speed is **20%** of the 'Learned Speed' (RPM) value. To change this value, press it and a keypad will appear, enter a new value and press **ENTER**.

7. **Enable Leg Shutdown;** When this indicator is 'Yellow' the Leg Shutdown Relay is used to stop the equipment when a shutdown alarm condition exists. A shutdown alarm condition occurs any

time the speed drops below the alarm speed setpoint. When this indicator is ‘Gray’ the Leg Shutdown Relay is unused, and the equipment must be manually stopped by an operator during an alarm condition.

8. **Time Until Maintenance Display;** This optional display shows the remaining time (in hours) until the ‘Maintenance Required’ indicator appears on the equipment screen. This option is only available when a “Running Input” is connected to the system.

9. **Reset Maintenance Hours;** This button is used to reset the ‘Time Until Maintenance’ hours back to the value entered at the ‘Maintenance Interval Preset’, after preventative maintenance has been performed.

10. **Maintenance Interval Preset Setpoint;** This is a value (in hours) that is used in comparison with the equipment run time, which is tracked using the “Running Input” signal. When the equipment is operating, the ‘Time Until Maintenance’ display counts down towards ‘0’. Once the ‘Time Until Maintenance’ display shows ‘0’, the ‘Maintenance Required’ indicator appears on the equipment screen. If this setpoint is set to ‘0’, the maintenance functions are disabled

2.5 MAINTENANCE

EQUIPMENT VIEW

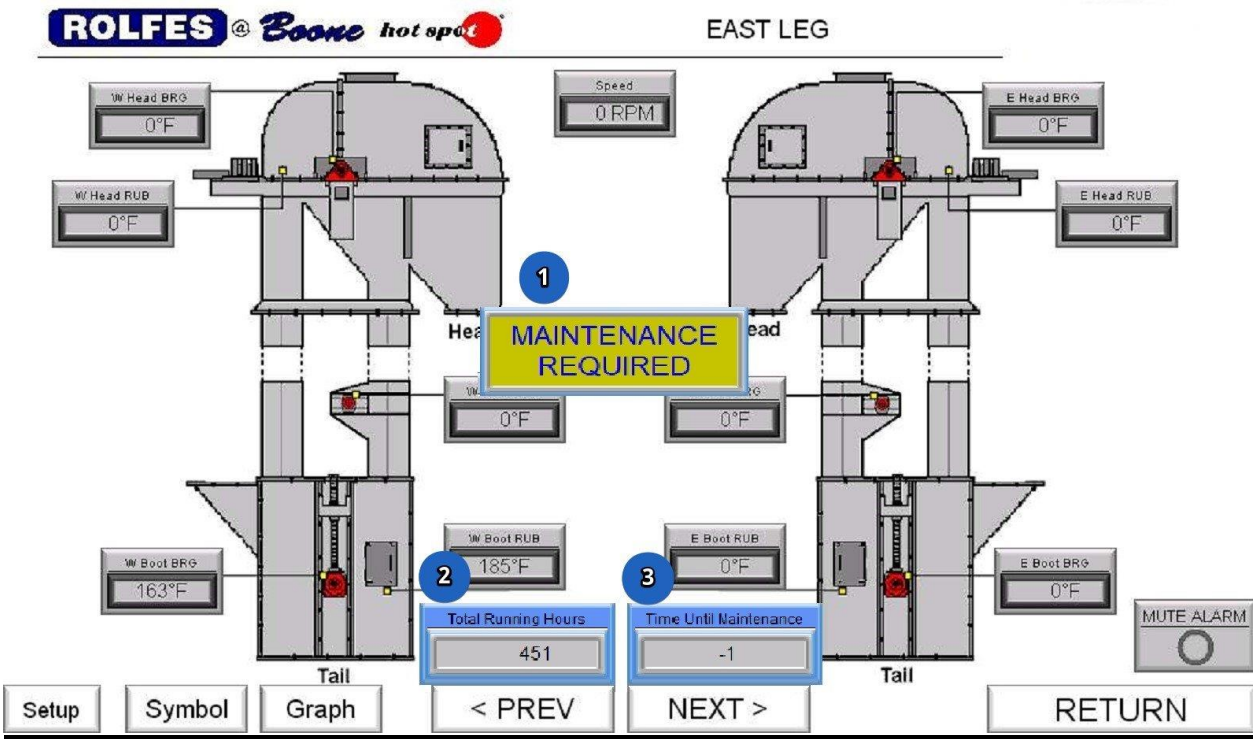

1. **Maintenance Required;**_This optional indicator appears when a non-zero value is entered in the 'Maintenance Interval Preset' on the setup screen, and the 'Time Until Maintenance' display counts down to zero (or less).

2. **Total Running Hours Display;** This optional display shows the total run time for the piece of equipment. This run time is based the cumulative time "Running Input" has been ON. This value in non-resettable. This indicator only appears when a non-zero value is entered in the 'Maintenance Interval Preset' on the setup screen.

3. **Time Until Maintenance Display;** This optional display shows the remaining time (in hours) until the 'Maintenance Required' indicator appears on the equipment screen. This indicator only appears when a non-zero value is entered in the 'Maintenance Interval Preset' on the setup screen.

3. SYMBOLS SCREEN (TYPICAL FOR ALL EQUIPMENT SCREENS)

SYMBOL VIEW

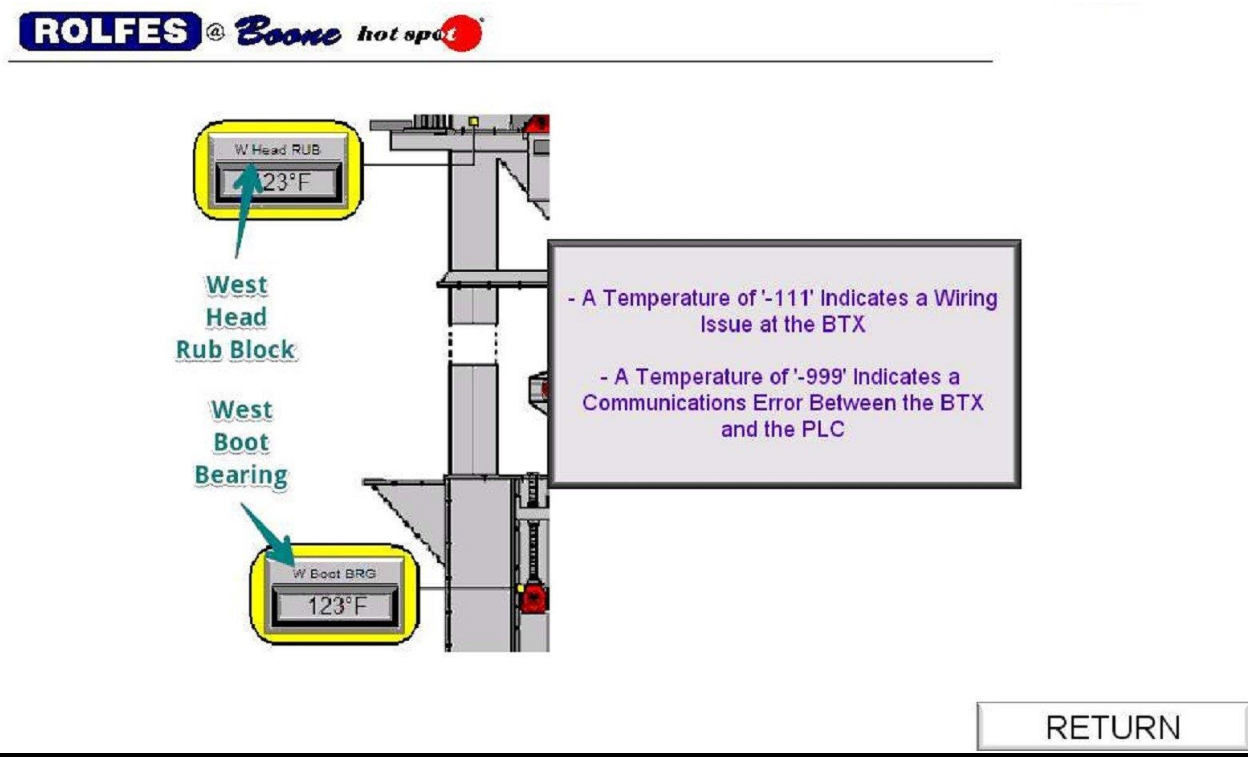

This screen is to inform the user of various abbreviations used throughout the various screens. It also defines what certain sensor values mean. Such as, a value of '-111' means a temperature sensor has a wiring issue. A value of '-999' means there is a communications error between a BTX board and the PLC controller.

4. GRAPH SCREEN (TYPICAL FOR ALL EQUIPMENT SCREENS)

GRAPH VIEW

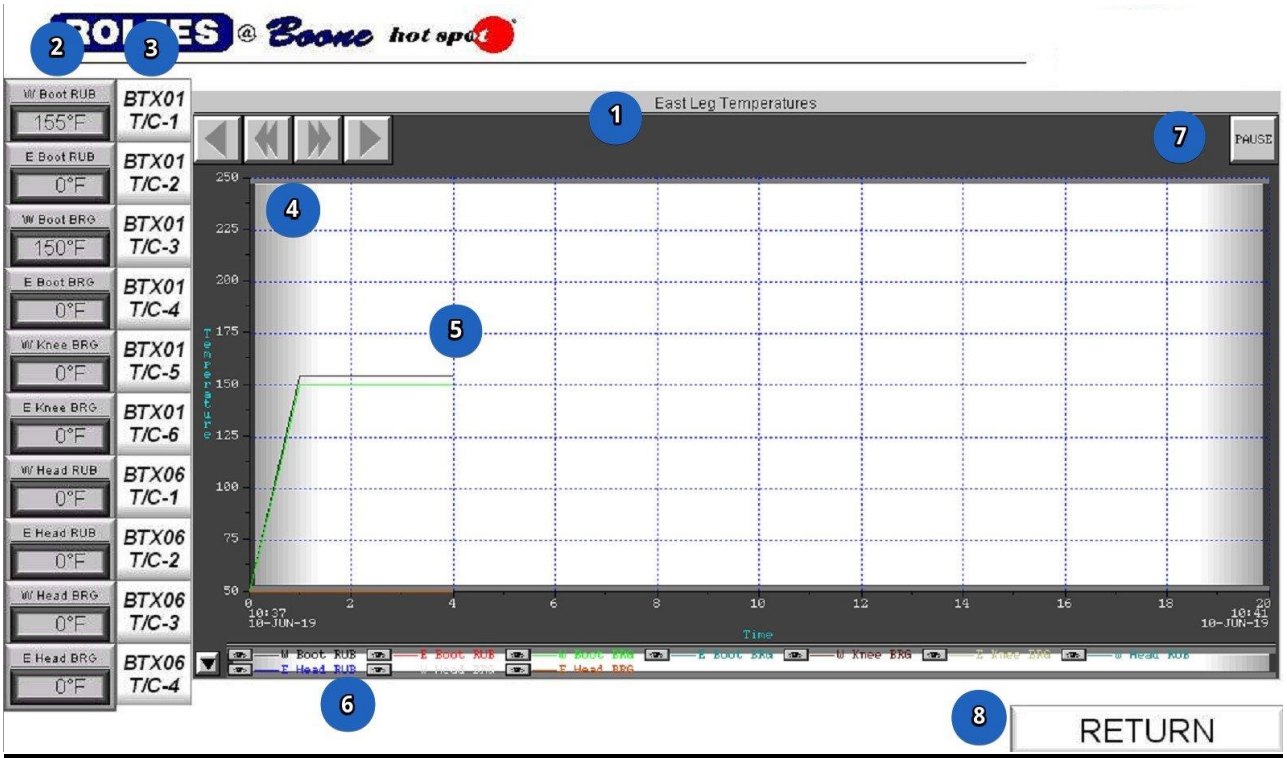

1. **Equipment Graph;** The name of the equipment temperature graph.

2. **Sensor Temperature Displays;** This column of displays shows the sensor name & the current temperature (in Degrees F) as read from each of the sensors for this piece of equipment.

3. **BTX01,T/C-1 (etc.);** This column indicates which board & terminal each sensor is connected to.

4. **Graph Scroll Buttons;** These buttons allow the user to move the viewable portion of the graph back into the past and forward to the present.

5. **Temperature Graph;** his is a running history of the temperatures for a piece of equipment. Each sensor is color coded.

6. **Temperature Graph Legend;** This is a list of all of the temperatures that are plotted on this equipment graph. Each sensor is named in the color that its line appears in on the graph.

7. **Pause;** This button is used to pause the viewable portion of the screen to prevent it from changing at time progresses.

8. **Return;** This button will return the display to the appropriate equipment screen.

5. APPENDIX

ALARM LIST

PLC TagName	Alarm Text
BTX01_COMMS_ALARM	BTX01 Communications Error
BTX02_COMMS_ALARM	BTX02 Communications Error
BTX03_COMMS_ALARM	BTX03 Communications Error
BTX04_COMMS_ALARM	BTX04 Communications Error
BTX05_COMMS_ALARM	BTX05 Communications Error
BTX06_COMMS_ALARM	BTX06 Communications Error
BTX07_COMMS_ALARM	BTX07 Communications Error
BTX08_COMMS_ALARM	BTX08 Communications Error
BTX09_COMMS_ALARM	BTX09 Communications Error
BTX10_COMMS_ALARM	BTX10 Communications Error
BTX11_COMMS_ALARM	BTX11 Communications Error
BTX12_COMMS_ALARM	BTX12 Communications Error
BTX13_COMMS_ALARM	BTX13 Communications Error
BTX14_COMMS_ALARM	BTX14 Communications Error
BTX15_COMMS_ALARM	BTX15 Communications Error
BTX16_COMMS_ALARM	BTX16 Communications Error
BTX17_COMMS_ALARM	BTX17 Communications Error
BTX18_COMMS_ALARM	BTX18 Communications Error
S101_ALARM_WORD:1	East Leg, West Boot RUB Temperature Alarm
S101_ALARM_WORD:2	East Leg, East Boot RUB Temperature Alarm
S101_ALARM_WORD:3	East Leg, West Boot BRG Temperature Alarm
S101_ALARM_WORD:4	East Leg, East Boot BRG Temperature Alarm
S101_ALARM_WORD:5	East Leg, West Knee BRG Temperature Alarm
S101_ALARM_WORD:6	East Leg, East Knee BRG Temperature Alarm
S101_ALARM_WORD:7	East Leg, West Head RUB Temperature Alarm
S101_ALARM_WORD:8	East Leg, East Head RUB Temperature Alarm
S101_ALARM_WORD:9	East Leg, West Head BRG Temperature Alarm
S101_ALARM_WORD:10	East Leg, East Head BRG Temperature Alarm
S101_ALARM_WORD:16	East Leg, RPM Slow-Down Alarm
S102_ALARM_WORD:1	West Leg, West Boot RUB Temperature Alarm
S102_ALARM_WORD:2	West Leg, East Boot RUB Temperature Alarm
S102_ALARM_WORD:3	West Leg, West Boot BRG Temperature Alarm
S102_ALARM_WORD:4	West Leg, East Boot BRG Temperature Alarm
S102_ALARM_WORD:5	West Leg, West Knee BRG Temperature Alarm
S102_ALARM_WORD:6	West Leg, East Knee BRG Temperature Alarm
S102_ALARM_WORD:7	West Leg, West Head RUB Temperature Alarm
S102_ALARM_WORD:8	West Leg, East Head RUB Temperature Alarm
S102_ALARM_WORD:9	West Leg, West Head BRG Temperature Alarm
S102_ALARM_WORD:10	West Leg, East Head BRG Temperature Alarm
S102_ALARM_WORD:16	West Leg, RPM Slow-Down Alarm
S103_ALARM_WORD:1	Wet Leg, West Boot RUB Temperature Alarm
S103_ALARM_WORD:2	Wet Leg, East Boot RUB Temperature Alarm

S103_ALARM_WORD:3	Wet Leg, West Boot BRG Temperature Alarm
S103_ALARM_WORD:4	Wet Leg, East Boot BRG Temperature Alarm
S103_ALARM_WORD:5	Wet Leg, West Knee BRG Temperature Alarm
S103_ALARM_WORD:6	Wet Leg, East Knee BRG Temperature Alarm
S103_ALARM_WORD:7	Wet Leg, West Head RUB Temperature Alarm
S103_ALARM_WORD:8	Wet Leg, East Head RUB Temperature Alarm
S103_ALARM_WORD:9	Wet Leg, West Head BRG Temperature Alarm
S103_ALARM_WORD:10	Wet Leg, East Head BRG Temperature Alarm
S103_ALARM_WORD:16	Wet Leg, RPM Slow-Down Alarm
S104_ALARM_WORD:1	Dry Leg, West Boot RUB Temperature Alarm
S104_ALARM_WORD:2	Dry Leg, East Boot RUB Temperature Alarm
S104_ALARM_WORD:3	Dry Leg, West Boot BRG Temperature Alarm
S104_ALARM_WORD:4	Dry Leg, East Boot BRG Temperature Alarm
S104_ALARM_WORD:5	Dry Leg, West Knee BRG Temperature Alarm
S104_ALARM_WORD:6	Dry Leg, East Knee BRG Temperature Alarm
S104_ALARM_WORD:7	Dry Leg, West Head RUB Temperature Alarm
S104_ALARM_WORD:8	Dry Leg, East Head RUB Temperature Alarm
S104_ALARM_WORD:9	Dry Leg, West Head BRG Temperature Alarm
S104_ALARM_WORD:10	Dry Leg, East Head BRG Temperature Alarm
S104_ALARM_WORD:16	Dry Leg, RPM Slow-Down Alarm
S105_ALARM_WORD:1	Load-Out Leg, West Boot RUB Temperature Alarm
S105_ALARM_WORD:2	Load-Out Leg, East Boot RUB Temperature Alarm
S105_ALARM_WORD:3	Load-Out Leg, West Boot BRG Temperature Alarm
S105_ALARM_WORD:4	Load-Out Leg, East Boot BRG Temperature Alarm
S105_ALARM_WORD:7	Load-Out Leg, West Head RUB Temperature Alarm
S105_ALARM_WORD:8	Load-Out Leg, East Head RUB Temperature Alarm
S105_ALARM_WORD:9	Load-Out Leg, West Head BRG Temperature Alarm
S105_ALARM_WORD:10	Load-Out Leg, East Head BRG Temperature Alarm
S105_ALARM_WORD:16	Load-Out Leg, RPM Slow-Down Alarm
S106_ALARM_WORD:3	Short Belt, North Tail BRG Temperature Alarm
S106_ALARM_WORD:4	Short Belt, South Tail BRG Temperature Alarm
S106_ALARM_WORD:9	Short Belt, North Head BRG Temperature Alarm
S106_ALARM_WORD:10	Short Belt, South Head BRG Temperature Alarm
S107_ALARM_WORD:3	41 Reclaim, North Tail BRG Temperature Alarm
S107_ALARM_WORD:4	41 Reclaim, South Tail BRG Temperature Alarm
S107_ALARM_WORD:9	41 Reclaim, North Head BRG Temperature Alarm
S107_ALARM_WORD:10	41 Reclaim, South Head BRG Temperature Alarm
S108_ALARM_WORD:3	West Pit Drag, North Tail BRG Temperature Alarm
S108_ALARM_WORD:4	West Pit Drag, South Tail BRG Temperature Alarm
S108_ALARM_WORD:9	West Pit Drag, North Head BRG Temperature Alarm
S108_ALARM_WORD:10	West Pit Drag, South Head BRG Temperature Alarm
S109_ALARM_WORD:3	East Pit Drag, North Tail BRG Temperature Alarm
S109_ALARM_WORD:4	East Pit Drag, South Tail BRG Temperature Alarm
S109_ALARM_WORD:9	East Pit Drag, North Head BRG Temperature Alarm
S109_ALARM_WORD:10	East Pit Drag, South Head BRG Temperature Alarm
S110_ALARM_WORD:3	West Reclaim Screw, Tail BRG Temperature Alarm
S110_ALARM_WORD:9	West Reclaim Screw, Head BRG Temperature Alarm
S111_ALARM_WORD:3	Long Belt, West Tail BRG Temperature Alarm
S111_ALARM_WORD:4	Long Belt, East Tail BRG Temperature Alarm

S111_ALARM_WORD:9	Long Belt, West Head BRG Temperature Alarm
S111_ALARM_WORD:10	Long Belt, East Head BRG Temperature Alarm
S112_ALARM_WORD:3	East Reclaim Screw, Tail BRG Temperature Alarm
S112_ALARM_WORD:9	East Reclaim Screw, Head BRG Temperature Alarm
S113_ALARM_WORD:3	42 Reclaim, West Tail BRG Temperature Alarm
S113_ALARM_WORD:4	42 Reclaim, East Tail BRG Temperature Alarm
S113_ALARM_WORD:9	42 Reclaim, West Head BRG Temperature Alarm
S113_ALARM_WORD:10	42 Reclaim, East Head BRG Temperature Alarm
S114_ALARM_WORD:3	43 Reclaim, West Tail BRG Temperature Alarm
S114_ALARM_WORD:4	43 Reclaim, East Tail BRG Temperature Alarm
S114_ALARM_WORD:9	43 Reclaim, West Head BRG Temperature Alarm
S114_ALARM_WORD:10	43 Reclaim, East Head BRG Temperature Alarm
S115_ALARM_WORD:3	Dryer Drag, North Tail BRG Temperature Alarm
S115_ALARM_WORD:4	Dryer Drag, South Tail BRG Temperature Alarm
S115_ALARM_WORD:9	Dryer Drag, North Head BRG Temperature Alarm
S115_ALARM_WORD:10	Dryer Drag, South Head BRG Temperature Alarm
S116_ALARM_WORD:3	42 Fill, West Tail BRG Temperature Alarm
S116_ALARM_WORD:4	42 Fill, East Tail BRG Temperature Alarm
S116_ALARM_WORD:9	42 Fill, West Head BRG Temperature Alarm
S116_ALARM_WORD:10	42 Fill, East Head BRG Temperature Alarm
S117_ALARM_WORD:3	43 Fill, West Tail BRG Temperature Alarm
S117_ALARM_WORD:4	43 Fill, East Tail BRG Temperature Alarm
S117_ALARM_WORD:9	43 Fill, West Head BRG Temperature Alarm
S117_ALARM_WORD:10	43 Fill, East Head BRG Temperature Alarm
S118_ALARM_WORD:3	Superflo North, West West Tail BRG Temperature Alarm
S118_ALARM_WORD:4	Superflo North, West East Tail BRG Temperature Alarm
S118_ALARM_WORD:9	Superflo North, West West Head BRG Temperature Alarm
S118_ALARM_WORD:10	Superflo North, West East Head BRG Temperature Alarm
S119_ALARM_WORD:3	Superflo South, West West Tail BRG Temperature Alarm
S119_ALARM_WORD:4	Superflo South, West East Tail BRG Temperature Alarm
S119_ALARM_WORD:9	Superflo South, West West Head BRG Temperature Alarm
S119_ALARM_WORD:10	Superflo South, West East Head BRG Temperature Alarm
S120_ALARM_WORD:3	Dry North Drag, West Tail BRG Temperature Alarm
S120_ALARM_WORD:4	Dry North Drag, East Tail BRG Temperature Alarm
S120_ALARM_WORD:9	Dry North Drag, West Head BRG Temperature Alarm
S120_ALARM_WORD:10	Dry North Drag, East Head BRG Temperature Alarm
S121_ALARM_WORD:3	Dry South Drag, West Tail BRG Temperature Alarm
S121_ALARM_WORD:4	Dry South Drag, East Tail BRG Temperature Alarm
S121_ALARM_WORD:9	Dry South Drag, West Head BRG Temperature Alarm
S121_ALARM_WORD:10	Dry South Drag, East Head BRG Temperature Alarm
S122_ALARM_WORD:3	Crossover, West Tail BRG Temperature Alarm
S122_ALARM_WORD:4	Crossover, East Tail BRG Temperature Alarm

S122_ALARM_WORD:9	Crossover, West Head BRG Temperature Alarm
S122_ALARM_WORD:10	Crossover, East Head BRG Temperature Alarm
S123_ALARM_WORD:3	41 Fill, West Tail BRG Temperature Alarm
S123_ALARM_WORD:4	41 Fill, East Tail BRG Temperature Alarm
S123_ALARM_WORD:9	41 Fill, West Head BRG Temperature Alarm
S123_ALARM_WORD:10	41 Fill, East Head BRG Temperature Alarm
BATTERY LOW BIT	PLC Battery is Low & Should Be Replaced